SIEMENS

Data sheet 3RA2317-8XE30-1BB4

REV. COMB. FOR 3RA27, AC3, 5.5KW/400V, DC24V 3-POLE, SZ S00 SCREW TERMINAL ELECTR. AND MECH. INTERLOCK

Product brand name	SIRIUS
Product designation	Reversing contactor assembly
Product type designation	3RA23
Manufacturer's article number	
• 1 of the supplied contactor	3RT2017-1BB42-0CC0
• 2 of the supplied contactor	3RT2017-1BB42
• of the supplied RH assembly kit	3RA2913-2AA1
• of the supplied function module for communication	3RA2711-1BA00

General technical data	
Size of contactor	S00
Product extension	
• Auxiliary switch	Yes
Insulation voltage	
• with degree of pollution 3 rated value	690 V
Degree of pollution	3
Surge voltage resistance rated value	6 kV
Protection class IP	
• on the front	IP20

Subject to change without notice
© Copyright Siemens

Shock resistance at rectangular impulse	
• at AC	7,3g / 5 ms, 4,7g / 10 ms
• at DC	7.3g / 5 ms, 4.7g / 10 ms
Shock resistance with sine pulse	
• at AC	11,4g / 5 ms, 7,3g / 10 ms
• at DC	11,4g / 5 ms, 7,3g / 10 ms
Mechanical service life (switching cycles)	
• of contactor typical	10 000 000
• of the contactor with added auxiliary switch block typical	10 000 000
Equipment marking	
• acc. to DIN EN 81346-2	Q

Ambient conditions

Ambient temperature	
• during operation	-25 ... +60 °C
• during storage	-55 ... +80 °C

Main circuit

Number of poles for main current circuit	3
Number of NO contacts for main contacts	3
Number of NC contacts for main contacts	0
Operating voltage	
• at AC-3 rated value maximum	690 V
Operating current	
• at AC-1 at 400 V	
— at ambient temperature 40 °C rated value	22 A
— at ambient temperature 60 °C rated value	20 A
• at AC-2 at 400 V rated value	7 A
• at AC-3	
— at 400 V rated value	12 A
Operating current	
• at 1 current path at DC-1	
— at 24 V rated value	20 A
— at 110 V rated value	2.1 A
• with 2 current paths in series at DC-1	
— at 24 V rated value	20 A
— at 110 V rated value	12 A
• with 3 current paths in series at DC-1	
— at 24 V rated value	20 A
— at 110 V rated value	20 A
Operating current	
• at 1 current path at DC-3 at DC-5	

Subject to change without notice
© Copyright Siemens

— at 24 V rated value	20 A
— at 110 V rated value	0.15 A
• with 2 current paths in series at DC-3 at DC-5	
— at 24 V rated value	20 A
— at 110 V rated value	0.35 A
• with 3 current paths in series at DC-3 at DC-5	
— at 24 V rated value	20 A
— at 110 V rated value	20 A
No-load switching frequency	1 500 1/h
Operating frequency	
• at AC-1 maximum	1 000 1/h
• at AC-2 maximum	750 1/h
• at AC-3 maximum	750 1/h
• at AC-4 maximum	250 1/h

Control circuit/ Control

Type of voltage of the control supply voltage	DC
Control supply voltage 1	
• at DC rated value	24 V
Design of the surge suppressor	with varistor
Closing power of magnet coil at DC	4 W
Holding power of magnet coil at DC	4 W

Auxiliary circuit

Operating current of auxiliary contacts at AC-12 maximum	10 A
Operating current of auxiliary contacts at AC-15	
• at 230 V	6 A
• at 400 V	3 A
Operating current of auxiliary contacts at DC-13	
• at 24 V	10 A
• at 60 V	2 A
• at 110 V	1 A
• at 220 V	0.3 A
Contact reliability of auxiliary contacts	< 1 error per 100 million operating cycles

UL/CSA ratings

Full-load current (FLA) for three-phase AC motor	
• at 480 V rated value	11 A
• at 600 V rated value	11 A
Yielded mechanical performance [hp]	
• for single-phase AC motor	
— at 110/120 V rated value	0.5 hp
— at 230 V rated value	2 hp

Subject to change without notice
© Copyright Siemens

• for three-phase AC motor	
— at 200/208 V rated value	1.5 hp
— at 220/230 V rated value	3 hp
— at 460/480 V rated value	7.5 hp
— at 575/600 V rated value	10 hp
Contact rating of auxiliary contacts according to UL	A600 / Q600

Short-circuit protection

Design of the fuse link	
• for short-circuit protection of the main circuit	
— with type of coordination 1 required	gL/gG NH 3NA, DIAZED 5SB, NEOZED 5SE: 50 A
— with type of assignment 2 required	gL/gG LV HRC 3NA, DIAZED 5SB, NEOZED 5SE: 25 A
• for short-circuit protection of the auxiliary switch required	fuse gL/gG: 10 A

Installation/ mounting/ dimensions

Mounting position	+/-180° rotation possible on vertical mounting surface; can be tilted forward and backward by +/- 22.5° on vertical mounting surface
Mounting type	screw and snap-on mounting onto 35 mm standard mounting rail
Height	68 mm
Width	90 mm
Depth	73 mm
Required spacing	
• with side-by-side mounting	
— forwards	6 mm
— Backwards	0 mm
— upwards	6 mm
— downwards	6 mm
— at the side	6 mm
• for grounded parts	
— forwards	6 mm
— Backwards	0 mm
— upwards	6 mm
— at the side	6 mm
— downwards	6 mm
• for live parts	
— forwards	6 mm
— Backwards	0 mm
— upwards	6 mm
— downwards	6 mm
— at the side	6 mm

Connections/Terminals

Subject to change without notice
© Copyright Siemens

Type of electrical connection	
• for main current circuit	screw-type terminals
• for auxiliary and control current circuit	screw-type terminals
Type of connectable conductor cross-sections	
• for main contacts	
— solid	2x (0.5 ... 1.5 mm²), 2x (0.75 ... 2.5 mm²), 2x 4 mm²
— single or multi-stranded	2x (0,5 ... 1,5 mm²), 2x (0,75 ... 2,5 mm²), 2x (0,5 ... 4 mm²)
— finely stranded with core end processing	2x (0.5 ... 1.5 mm²), 2x (0.75 ... 2.5 mm²)
• at AWG conductors for main contacts	2x (20 ... 16), 2x (18 ... 14)
Type of connectable conductor cross-sections	
• for auxiliary contacts	
— single or multi-stranded	2x (0,5 ... 1,5 mm²), 2x (0,75 ... 2,5 mm²)
— finely stranded with core end processing	2x (0.5 ... 1.5 mm²), 2x (0.75 ... 2.5 mm²)
• at AWG conductors for auxiliary contacts	2x (20 ... 16), 2x (18 ... 14)

Safety related data

B10 value	
• with high demand rate acc. to SN 31920	1 000 000
Proportion of dangerous failures	
• with low demand rate acc. to SN 31920	40 %
• with high demand rate acc. to SN 31920	75 %
Failure rate [FIT]	
• with low demand rate acc. to SN 31920	100 FIT
T1 value for proof test interval or service life acc. to IEC 61508	20 y

Communication/ Protocol

Product function Bus communication	Yes
Protocol is supported	
• AS-interface protocol	No

Certificates/approvals

Subject to change without notice
© Copyright Siemens

General Product Approval			Declaration of Conformity	Test Certificates	
CSA	UL	EAC	EG-Konf.	Type Test Certificates/Test Report	Special Test Certificate

Marine / Shipping					
ABS	BUREAU VERITAS	GL	LRS	PRS	RMRS

Marine / Shipping	other		Railway
DNV·GL	Environmental Confirmations	Confirmation	Vibration and Shock

Further information

Information- and Downloadcenter (Catalogs, Brochures,…)
http://www.siemens.com/industrial-controls/catalogs

Industry Mall (Online ordering system)
https://mall.industry.siemens.com/mall/en/en/Catalog/product?mlfb=3RA2317-8XE30-1BB4

Cax online generator
http://support.automation.siemens.com/WW/CAXorder/default.aspx?lang=en&mlfb=3RA2317-8XE30-1BB4

Service&Support (Manuals, Certificates, Characteristics, FAQs,...)
https://support.industry.siemens.com/cs/ww/en/ps/3RA2317-8XE30-1BB4

Image database (product images, 2D dimension drawings, 3D models, device circuit diagrams, EPLAN macros, ...)
http://www.automation.siemens.com/bilddb/cax_de.aspx?mlfb=3RA2317-8XE30-1BB4&lang=en

Subject to change without notice
© Copyright Siemens

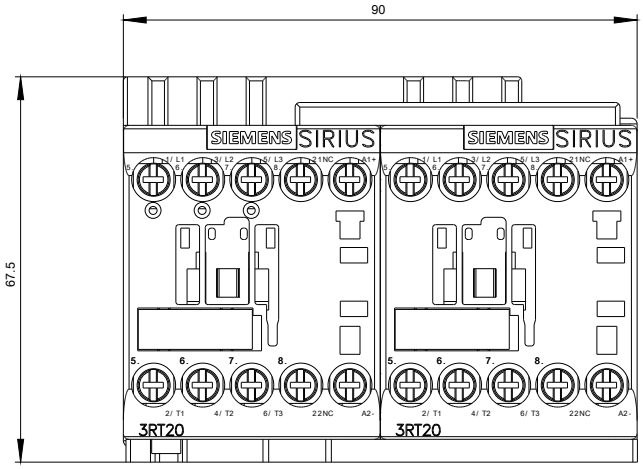

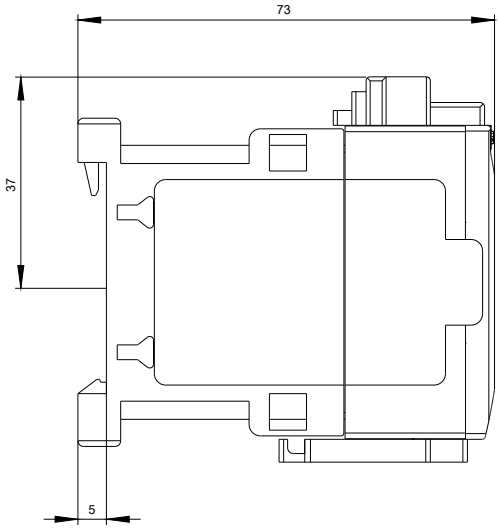

Subject to change without notice
© Copyright Siemens

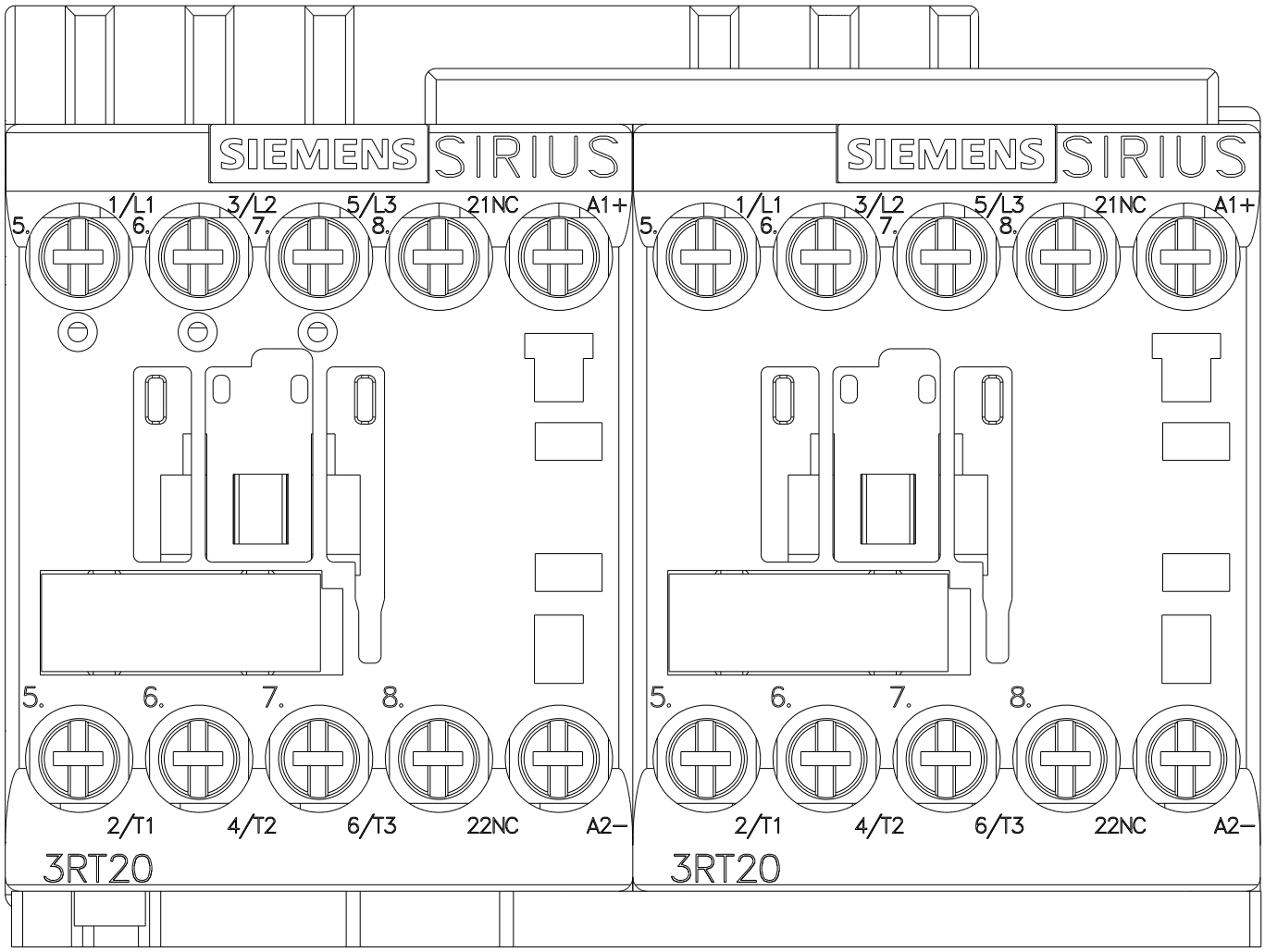

Subject to change without notice
© Copyright Siemens

WENDEKOMBINATION BGR. S00

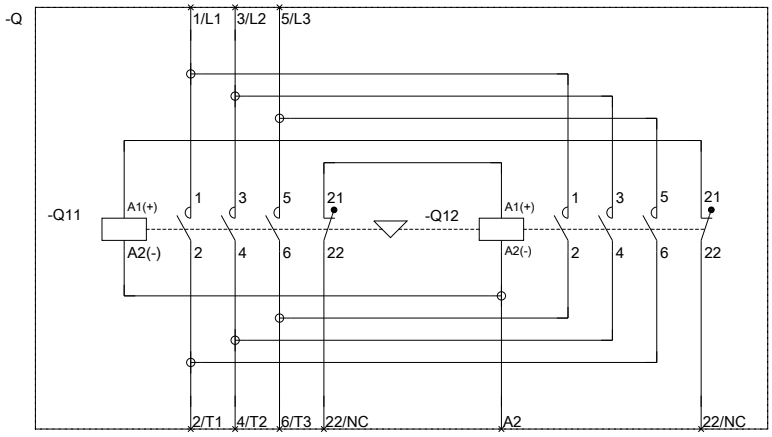

REVERSING COMB. SZ S00

last modified: 07/14/2017

Subject to change without notice
© Copyright Siemens