C25-21

nVent RAYCHEM

CONNECT AND PROTECT

Heat-shrink connection kit

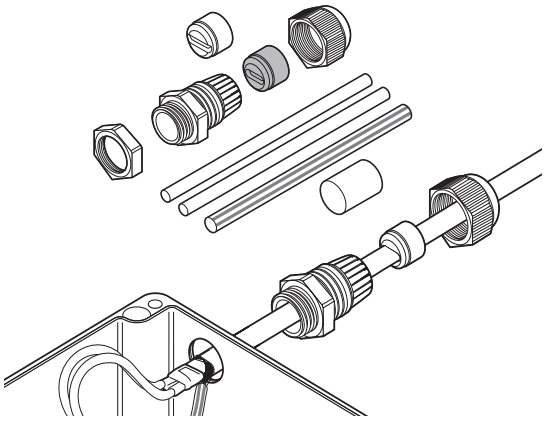

This connection kit is designed for terminating all nVent RAYCHEM BTV, QTVR, XTV, KTV and VPL industrial parallel heating cables to a junction box, whilst maintaining electrical insulation of the heating cable conductors and core.

The sealing of the heating cable core is provided by nVent RAYCHEM heat-shrinkable sleeves. Two grommets supplied in this kit enable the gland to maintain optimum sealing under various ambient conditions.

An additional locknut is provided for unthreaded entries.

APPLICATION

Connection kit for BTV, QTVR, XTV, KTV and VPL parallel heating cables

KIT CONTENTS

1 gland,
2 grommets,
1 locknut,
1 green/yellow tube, heat-shrinkable sleeves for core sealing,
1 installation instruction (multilingual)

APPROVALS

The kit is certified as part of the system approval of the various heating cables.

Baseefa16ATEX0037U
Ex II 2 G Ex eb IIC Gb
Ex II 2 D Ex tb IIIC Db

IECEx BAS 16.0040U
Ex eb IIC Gb
Ex tb IIIC Db

BTV	QTVR	XTV	KTV	VPL
SGS20ATEX0048X	SGS20ATEX0050X	SGS20ATEX0049X	SGS20ATEX0051X	SGS20ATEX0045X
IECEx BAS 20.0011X	IECEx BAS 20.0013X	IECEx BAS 20.0012X	IECEx BAS 20.0014X	IECEx BAS 20.0008X

EAC Ex TC RU C-BE.МЮ62.B.00054/18
1Ex e IIC Gb X Ex tb IIIC Db X
Ta −55°C...+110°C IP66
ООО "ТехИмпорт"

DNV-GL TAE00000TV
DNV-GL TAE00000TU

PRODUCT SPECIFICATION

Area classification	Hazardous, Zone 1, Zone 2 (Gas), Zone 21, Zone 22 (Dust) Ordinary
Type	Heat-shrinkable
Thread size	M25 x 1.5
Min. ambient temperature	–55°C
Max. exposure temperature (gland)	110°C
IP ingress protection rating	IP66

ORDERING DETAILS

Part description	nVent RAYCHEM C25-21
PN (Weight)	311147-000 (0.06 kg)

North America
Tel +1.800.545.6258
Fax +1.800.527.5703
thermal.info@nVent.com

Europe, Middle East, Africa
Tel +32.16.213.502
Fax +32.16.213.604
thermal.info@nVent.com

Asia Pacific
Tel +86.21.2412.1688
Fax +86.21.5426.3167
cn.thermal.info@nVent.com

Latin America
Tel +1.713.868.4800
Fax +1.713.868.2333
thermal.info@nVent.com

Our powerful portfolio of brands:
CADDY ERICO HOFFMAN RAYCHEM SCHROFF TRACER

©2021 nVent. All nVent marks and logos are owned or licensed by nVent Services GmbH or its affiliates. All other trademarks are the property of their respective owners.
nVent reserves the right to change specifications without notice.