CATALOG

Industrial plugs and sockets

New Easy & Safe

Industrial plugs and sockets

IEC 60309-2 “clock”

I_e =16 A, 32 A, 63 A, 125 A
U_e = 50...1000 V

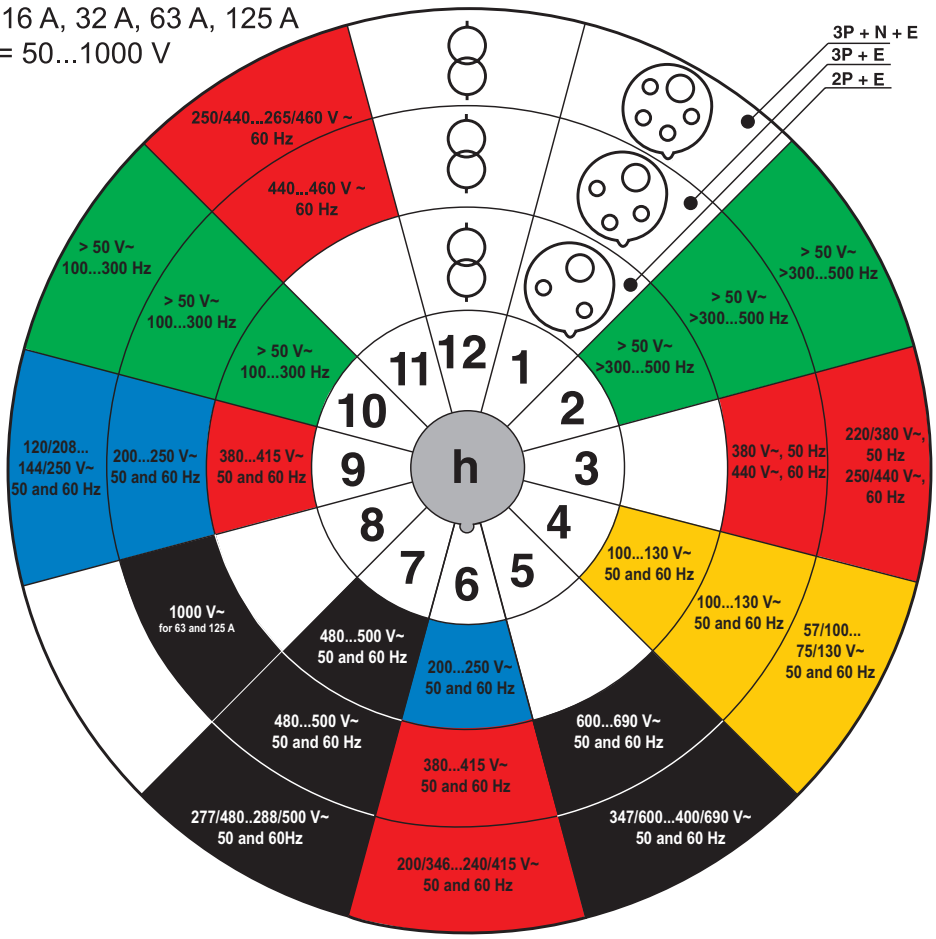

3P + N + E

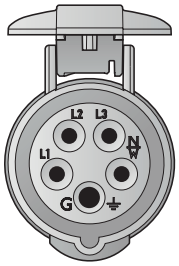

3P + E

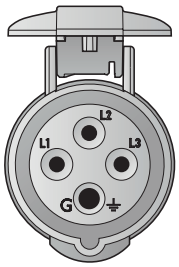

2P + E

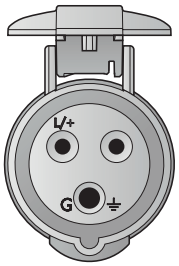

—
Standard voltages - Color codes according to IEC60309-1, -2

Position of earthing sleeve according to IEC 60309-2 (clock)	2P+E	3P+E	3P+N+E
1	☐ Optional voltage (not stated below)	☐ Optional voltage (not stated below)	☐ Optional voltage (not stated below)
2	■ >50 V~ >300...500 Hz	■ >50 V~ >300...500 Hz	■ >50 V~ >300...500 Hz
3	☐ Not used	■ 380 V~ 50 Hz, 440 V 60 Hz	■ 220/380 V~ 50 Hz, 250/440 V 60 Hz
4	■ 100...130 V~ 50 and 60 Hz	■ 100...130 V~ 50 and 60 Hz	■ 57/100...75/130 V~ 50 and 60 Hz
5	☐ Not used	■ 600...690 V~ 50 and 60 Hz	■ 347/600...400/690 V~ 50 and 60 Hz
6	■ 200...250 V~ 50 and 60 Hz	■ 380...415 V~ 50 and 60 Hz	■ 200/346...240/415 V~ 50 and 60 Hz
7	■ 480-500 V~ 50 and 60 Hz	■ 480...500 V~ 50 and 60 Hz	■ 277/480...288/500 V~ 50 and 60 Hz
8	☐ Not used	■ 1000 V~ (for 63 A and 125 A)	☐ Not used
9	■ 380...415 V~ 50 and 60 Hz	■ 200...250 V~ 50 and 60 Hz	■ 120/208...144/250 V~ 50 and 60 Hz
10	■ >50 V~ 100...300 Hz	■ >50 V~ 100...300 Hz	■ >50 V~ 100...300 Hz
11 Mainly for marine installations	☐ Not used	■ 440...460 V~ 60 Hz	■ 250/440...265/460 V~ 60 Hz
12 Supply from isolating transformer	☐ Supply from isolating transformer	☐ Supply from isolating transformer	☐ Supply from isolating transformer

Contents

002	**Overview the new Easy & Safe**
004	**IEC 60309-2 (clock)**
005	**Introduction new Easy & Safe**
	Easy & Safe
	IP44
006–007	**Plugs**
008–009	**Connectors**
010–011	**Inlets for wall mounting**
012–013	**Inlets for panel mounting**
014–018	**Socket outlet for wall mounting**
019–025	**Socket outlets for panel mounting**
	IP67
027–028	**Plugs**
029–030	**Connectors**
031–032	**Inlets for wall mounting**
033–034	**Inlets for panel mounting**
035–039	**Socket outlet for wall mounting**
040–041	**Socket outlets for panel mounting**
	Plugs & sockets for entertainment applications
042–043	**Introduction Plugs & sockets for entertainment appl.**
	IP44
044	**Plugs**
045	**Connectors**
046	**Inlets for wall mounting**
047	**Socket outlets for wall mounting**
048–049	**Socket outlets for panel mounting**
	Fast & Safe
050–051	**Introduction Fast & Safe**
	IP44
052	**Plugs**
053	**Connectors**
054–055	**Inlets for wall mounting**
056–058	**Inlets for panel mounting**
059	**Socket outlet for wall mounting**
060–062	**Socket outlets for panel mounting**
	IP67
063	**Plugs**
064	**Connectors**
065	**Inlets for wall mounting**
066–067	**Inlets for panel mounting**
068	**Socket outlet for wall mounting**
069–071	**Socket outlets for panel mounting**
	Additional products and accessories
	IP44
072–073	**Phase invert**
	IP67
074–075	**Phase invert**
	IP67
076	**Socket outlet for Modular combi**
	IP44
077	**Surface socket outlet with schuko**

Industrial plugs and sockets
New Easy & Safe

reddot design award
winner 2017

Plugs

Type EP...
16 A...32A, IP44

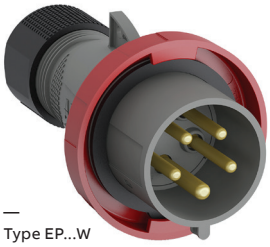

Type EP...W
16A...32 A, IP67

Connectors

Type EC...
16 A...32 A, IP44

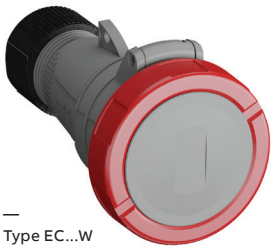

Type EC...W
16 A...32 A, IP67

Inlets

For wall mounting, Type BS...
16 A...32 A, IP44

For wall mounting, Type EBS...W
16 A...32 A, IP67

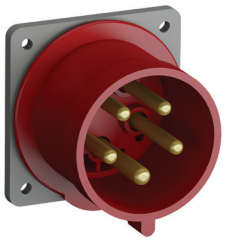

For panel mounting with unified straight flange, Type ...BU...
16A...32 A, IP44

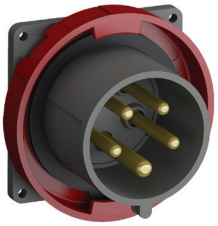

For panel mounting with unified straight flange, Type EBU...W
16 A...32 A, IP67

Socket outlet

For wall mounting, Type RS...
16A...32 A, IP44

For wall mounting, Type ERS...W
16 A...32A, IP67

For panel mounting with unified straight flange, Type RU...
16 A...32 A, IP44

For panel mounting with unified angled flange, Type RAU...
16 A...32A, IP44

For panel mounting with minimized straight flange, Type R...
16 A...32 A, IP44

For panel mounting with minimized angled flange, Type RAM...
16 A...32A, IP44

For panel mounting with unified straight flange, Type ERU...W
16 A...32A, IP67

Industrial plugs and sockets
New Easy & Safe

Our new industrial plugs and sockets complements ABB's strong low-voltage offer. These plugs and sockets are part of Easy & Safe. Easy & Safe is a product range suitable for general use in most applications.

In most installations, industrial plugs and sockets are part of the exterior, for that reason it was important to have an attractive design. The modern design and the strong ABB brand adds value to each installation or OEM equipment.

Protect your contacts with new Easy & Safe IP67
The biggest addition in this series is the new designed products with IP67 ingress protection. IP67 is a protection class that guarantees water and dust tightness. Although water or dust rarely occurs in some applications, the liquids or dirt may get into the contacting surfaces during the products lifetime, which will affect the contacts performance. This in turn can lead to overheating, burnt contacts and need of replacing plugs and sockets.
Worst case scenario is that fluids or dust reaches the contact parts, which in turn can lead to accidents with injuries and damage the connected equipment.

Electrical contacts protected against liquids and dirt retains its performance over time. High contact performance means reliability, reducing downtime and lowers maintenance costs. Contact parts of ABB's connectors are manufactured with high precision from solid brass. The innovative design means that the contacts seem self-cleaning during connection and disconnection while keeping the contact area free from arcing.

Next generation of IP44 plugs and connectors
Some features of the new IP67 products are also implemented in the IP44 plugs and connectors. With the new cable gland we get improved sealing and strain relief, it also functions with a wider span of cables. We have also implemented the new family design of ABB Industrial plugs and sockets.

Applications
New Easy & Safe series is an excellent choice in most applications where high reliability and safety are required. For example

- Industrial applications
- Food and beverage industries
- Infrastructure applications
- Construction sites
- Mines
- Marine applications connection of reefer containers

For tough applications with specific requirements for UV resistance, chemical resistance, mechanical resistance, our Tough & Safe series is still the best option.

Plugs

IP44

EASY & SAFE

16 A. Splashproof
Housing in plastic (PA). Cable entry with compression gland. Cable area 1...2.5 mm²

Terminals/ Poles	Color code	Voltage V	Frequency Hz	Type	Order Code	Pkg qty	Weight pkg (1pce) kg
2P+E							
3	Grey		AC	216EP1	2CMA101943R1000	10	0.11
	Green	>50	>300...500	216EP2	2CMA101944R1000		
	Yellow	100...130	50 and 60	216EP4	2CMA101946R1000		
	Blue	200...250		216EP6	2CMA101947R1000		
	Red	380...415		216EP9	2CMA101948R1000		
	Grey	transf		216EP12	2CMA101950R1000		
3P+E							
4	Grey		AC	316EP1	2CMA101951R1000	10	0.16
	Green	>50	>300...500	316EP2	2CMA101952R1000		
	Red	380/440	50/60	316EP3	2CMA101953R1000		
	Yellow	100...130	50 and 60	316EP4	2CMA101954R1000		
	Black	600...690		316EP5	2CMA101955R1000		
	Red	380...415		316EP6	2CMA101956R1000		
	Black	480...500		316EP7	2CMA101957R1000		
	Blue	200...250		316EP9	2CMA101958R1000		
	Green	>50	100...300	316EP10	2CMA101959R1000		
	Red	440...460	60	316EP11	2CMA101960R1000		
	Grey	transf	50 and 60	316EP12	2CMA101961R1000		
3P+N+E							
5	Grey		AC	416EP1	2CMA101962R1000	10	0.18
	Green	>50	>300...500	416EP2	2CMA101963R1000		
	Red	380...440	50/60	416EP3	2CMA101964R1000		
	Yellow	100...130	50 and 60	416EP4	2CMA101965R1000		
	Black	600...690		416EP5	2CMA101966R1000		
	Red	346...415		416EP6	2CMA101967R1000		
	Black	480...500		416EP7	2CMA101968R1000		
	Blue	208...250		416EP9	2CMA101969R1000		
	Red	440...460	60	416EP11	2CMA101970R1000		

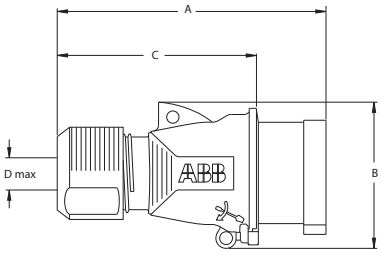

Dimensions (mm)

Type	A	B	C	Dmax
216EP...	127	62.5	88.5	14
316EP...	144	74.5	106	17
416EP...	144	78	106	17

Plugs

IP44

32 A. Splashproof
Housing in plastic (PA). Cable entry with compression gland. Cable area 2.5...6 mm²

Terminals/ Poles	Color code	Voltage	Frequency	Type	Order Code	Pkg qty	Weight pkg (1pce)
		V	Hz				kg
2P+E							
3	Grey		AC	232EP1	2CMA101971R1000	10	0.21
	Green	>50	>300...500	232EP2	2CMA101972R1000		
	Yellow	100...130	50 and 60	232EP4	2CMA101974R1000		
	Blue	200...250		232EP6	2CMA101975R1000		
	Red	380...415		232EP9	2CMA101976R1000		
	Grey	transf		232EP12	2CMA101978R1000		
3P+E							
4	Grey		AC	332EP1	2CMA101979R1000	10	0.23
	Green	>50	>300...500	332EP2	2CMA101980R1000		
	Red	380/440	50/60	332EP3	2CMA101981R1000		
	Yellow	100...130	50 and 60	332EP4	2CMA101982R1000		
	Black	600...690		332EP5	2CMA101983R1000		
	Red	380...415		332EP6	2CMA101984R1000		
	Black	480...500		332EP7	2CMA101985R1000		
	Blue	200...250		332EP9	2CMA101986R1000		
	Green	>50	100...300	332EP10	2CMA101987R1000		
	Red	440...460	60	332EP11	2CMA101988R1000		
	Grey	transf	50 and 60	332EP12	2CMA101989R1000		
3P+N+E							
5	Grey		AC	432EP1	2CMA101990R1000	10	0.24
	Green	>50	>300...500	432EP2	2CMA101991R1000		
	Red	380...440	50/60	432EP3	2CMA101992R1000		
	Yellow	100...130	50 and 60	432EP4	2CMA101993R1000		
	Black	600...690		432EP5	2CMA101994R1000		
	Red	346...415		432EP6	2CMA101995R1000		
	Black	480...500		432EP7	2CMA101996R1000		
	Blue	208...250		432EP9	2CMA101997R1000		
	Red	440...460	60	432EP11	2CMA101998R1000		

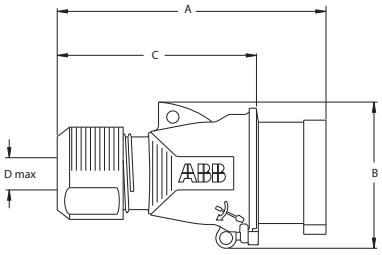

Dimensions (mm)

Type	A	B	C	Dmax
232EP...	167	82.5	121	22
332EP...	167	82.5	121	22
432EP...	167	87.5	121	22

Connectors

IP44

EASY & SAFE

16 A. Splashproof
Housing in plastic (PA). Cable entry with compression gland. Cable area 1...2.5 mm²

Terminals/ Poles	Color code	Voltage	Frequency	Type	Order Code	Pkg qty	Weight pkg (1pce)
		V	Hz				kg
2P+E							
3	Grey		AC	216EC1	2CMA101999R1000	10	0.16
	Green	>50	>300...500	216EC2	2CMA102000R1000		
	Yellow	100...130	50 and 60	216EC4	2CMA102002R1000		
	Blue	200...250		216EC6	2CMA102003R1000		
	Red	380...415		216EC9	2CMA102004R1000		
	Grey	transf		216EC12	2CMA102006R1000		
3P+E							
4	Grey		AC	316EC1	2CMA102007R1000	10	0.21
	Green	>50	>300...500	316EC2	2CMA102008R1000		
	Red	380/440	50/60	316EC3	2CMA102009R1000		
	Yellow	100...130	50 and 60	316EC4	2CMA102010R1000		
	Black	600...690		316EC5	2CMA102011R1000		
	Red	380...415		316EC6	2CMA102012R1000		
	Black	480...500		316EC7	2CMA102013R1000		
	Blue	200...250		316EC9	2CMA102014R1000		
	Green	>50	100...300	316EC10	2CMA102015R1000		
	Red	440...460	60	316EC11	2CMA102016R1000		
	Grey	transf	50 and 60	316EC12	2CMA102017R1000		
3P+N+E							
5	Grey		AC	416EC1	2CMA102018R1000	10	0.23
	Green	>50	>300...500	416EC2	2CMA102019R1000		
	Red	380...440	50/60	416EC3	2CMA102020R1000		
	Yellow	100...130	50 and 60	416EC4	2CMA102021R1000		
	Black	600...690		416EC5	2CMA102022R1000		
	Red	346...415		416EC6	2CMA102023R1000		
	Black	480...500		416EC7	2CMA102024R1000		
	Blue	208...250		416EC9	2CMA102025R1000		
	Red	440...460	60	416EC11	2CMA102026R1000		

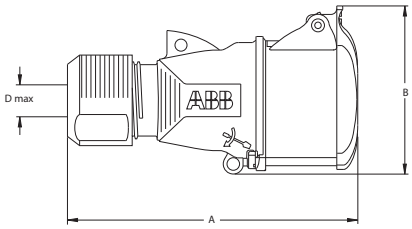

Dimensions (mm)

Type	A	B	Dmax
216EC...	135.5	74.5	14
316EC...	155	87	17
416EC...	156	90.5	17

Connectors

IP44

32 A. Splashproof
Housing in plastic (PA). Cable entry with compression gland. Cable area 2.5...6 mm²

Terminals/ Poles	Color code	Voltage	Frequency	Type	Order Code	Pkg qty	Weight pkg (1pce)
		V	Hz				kg
2P+E							
3	Grey		AC	232EC1	2CMA102027R1000	10	0.26
	Green	>50	>300...500	232EC2	2CMA102028R1000		
	Yellow	100...130	50 and 60	232EC4	2CMA102030R1000		
	Blue	200...250		232EC6	2CMA102031R1000		
	Red	380...415		232EC9	2CMA102032R1000		
	Grey	transf		232EC12	2CMA102034R1000		
3P+E							
4	Grey		AC	332EC1	2CMA102035R1000	10	0.28
	Green	>50	>300...500	332EC2	2CMA102036R1000		
	Red	380/440	50/60	332EC3	2CMA102037R1000		
	Yellow	100...130	50 and 60	332EC4	2CMA102038R1000		
	Black	600...690		332EC5	2CMA102039R1000		
	Red	380...415		332EC6	2CMA102040R1000		
	Black	480...500		332EC7	2CMA102041R1000		
	Blue	200...250		332EC9	2CMA102042R1000		
	Green	>50	100...300	332EC10	2CMA102043R1000		
	Red	440...460	60	332EC11	2CMA102044R1000		
	Grey	transf	50 and 60	332EC12	2CMA102045R1000		
3P+N+E							
5	Grey		AC	432EC1	2CMA102046R1000	10	0.30
	Green	>50	>300...500	432EC2	2CMA102047R1000		
	Red	380...440	50/60	432EC3	2CMA102048R1000		
	Yellow	100...130	50 and 60	432EC4	2CMA102049R1000		
	Black	600...690		432EC5	2CMA102050R1000		
	Red	346...415		432EC6	2CMA102051R1000		
	Black	480...500		432EC7	2CMA102052R1000		
	Blue	208...250		432EC9	2CMA102053R1000		
	Red	440...460	60	432EC11	2CMA102054R1000		

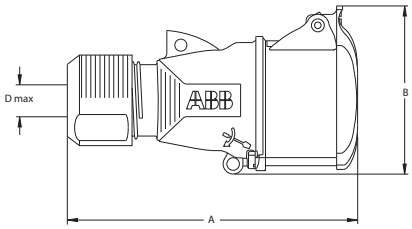

Dimensions (mm)

Type	A	B	Dmax
232EC...	182	93.5	22
332EC...	182	93.5	22
432EC...	182.5	99	22

Inlets

for wall mounting, IP44

EASY & SAFE

16 A. Splashproof
Housing in plastic (PA). Flexible membrane and metric threaded M20 insert for cop cable entry.
Rear knock-out cable entry. Cable area 1...2.5 mm²

Terminals/ Poles	Color code	Voltage	Frequency	Type	Order Code	Pkg qty	Weight pkg (1pce)
		V	Hz				kg
2P+E							
3	Grey		AC	216BS1	2CMA193293R1000	10	0.15
	Yellow	100...130	50 and 60	216BS4	2CMA193289R1000		
	Blue	200...250		216BS6	2CMA193290R1000		
	Red	380...415		216BS9	2CMA193291R1000		
	Grey	transf.		216BS12	2CMA193292R1000		
3P+E							
4	Grey		AC	316BS1	2CMA193303R1000	10	0.19
	Yellow	100...130	50 and 60	316BS4	2CMA193296R1000		
	Black	600...690		316BS5	2CMA193297R1000		
	Red	380...415		316BS6	2CMA193298R1000		
	Black	480...500		316BS7	2CMA193299R1000		
	Blue	200...250		316BS9	2CMA193300R1000		
	Green	>50	100...300	316BS10	2CMA193301R1000		
	Red	440...460	60	316BS11	2CMA193302R1000		
3P+N+E							
5	Grey		AC	416BS1	2CMA193311R1000	10	0.20
	Green	>50	>300...500	416BS2	2CMA193304R1000		
	Black	600...690	50 and 60	416BS5	2CMA126699R1000		
	Red	346...415		416BS6	2CMA193307R1000		
	Blue	208...250		416BS9	2CMA193309R1000		
	Red	440...460	60	416BS11	2CMA193310R1000		

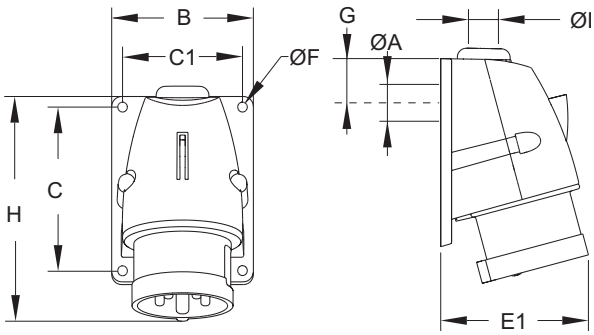

Dimensions (mm)

Type	A	B	C	C1	Dmax	E1	F	G	H
216BS..	23	66	75	54	18/M20	72	5.5	27	110
316BS..	23	79	91	67	18/M20	78	5.5	30	124
416BS..	23	79	91	67	18/M20	81	5.5	30	125

Inlets

for wall mounting, IP44

32 A. IP44. Splashproof
Housing in plastic (PA). Flexible membrane and metric threaded M25 insert for cop cable entry.
Rear knock-out cable entry. Cable area 2.5...6 mm²

Terminals/ Poles	Color code	Voltage	Frequency	Type	Order Code	Pkg qty	Weight pkg (1pce)
		V	Hz				kg
2P+E							
	Grey		AC	232BS1	2CMA193317R1000	10	0.25
	Yellow	100...130	50 and 60	232BS4	2CMA193313R1000		
	Blue	200...250		232BS6	2CMA193314R1000		
3	Red	380...415		232BS9	2CMA193315R1000		
3P+E							
4	Grey		AC	332BS1	2CMA193327R1000	10	0.27
	Red	380/440	50/60	332BS3	2CMA193319R1000		
	Yellow	100...130	50 and 60	332BS4	2CMA193320R1000		
	Black	600...690		332BS5	2CMA193321R1000		
	Red	380...415		332BS6	2CMA193322R1000		
	Black	480...500		332BS7	2CMA193323R1000		
	Blue	200...250		332BS9	2CMA193324R1000		
	Green	>50	100...300	332BS10	2CMA193325R1000		
	Red	440...460	60	332BS11	2CMA193326R1000		
3P+N+E							
5	Grey		AC	432BS1	2CMA193335R1000	10	0.29
	Black	600...690	50 and 60	432BS5	2CMA126700R1000		
	Red	346...415		432BS6	2CMA193331R1000		
	Black	480...500		432BS7	2CMA193332R1000		
	Blue	208...250		432BS9	2CMA193333R1000		

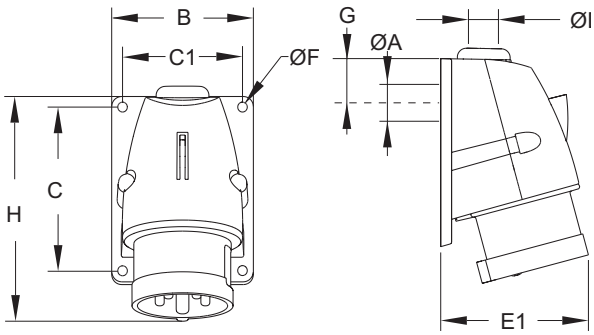

Dimensions (mm)

Type	A	B	C	C1	Dmax	E1	F	G	H
232BS..	29	85	111	72	22/M25	94	5.5	34	153
332BS..	29	85	111	72	22/M25	94	5.5	34	153
432BS..	29	85	111	72	22/M25	96	5.5	34	154

Inlets

for panel mounting with minimized or unified straight flange, IP44

EASY & SAFE

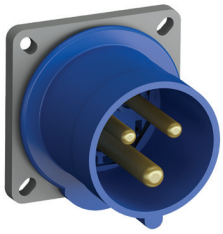

216B6

16 A. Splashproof
Housing in plastic (PA). Minimized flange, Cable area 1...2.5 mm²

Terminals/ Poles	Color code		Voltage	Frequency	Type	Order Code	Pkg qty	Weight pkg (1pce)
			V	Hz				kg
2P+E								
3		Grey		AC	216B1	2CMA193341R1000	10	0.10
		Blue	200...250	50 and 60	216B6	2CMA193338R1000		
3P+E								
4		Yellow	100...130	50 and 60	316B4	2CMA100187R1000	10	0.13
		Black	600...690		316B5	2CMA193345R1000		
		Red	380...415		316B6	2CMA193346R1000		
		Blue	200...250		316B9	2CMA193348R1000		
3P+N+E								
5		Grey		AC	416B1	2CMA193359R1000	10	0.14
		Red	346...415	50 and 60	416B6	2CMA193355R1000		
		Blue	208...250		416B9	2CMA193357R1000		

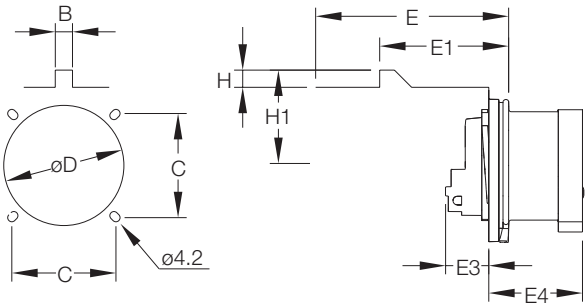

Dimensions (mm)

Type	B	C	D	E	E1	E3	E4	H	H1
216B...	9	44-47	49	75	40.5	21.5	46.5	4	30.0
316B...	9	50-52	59	80	46.8	21.0	47.0	5	34.0
416B...	9	50-52	59	90	52.5	21.0	46.5	7	38.0

Inlets

for panel mounting with minimized or unified straight flange, IP44

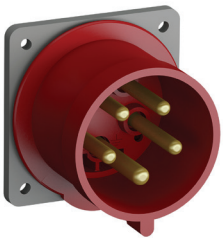

432BU6

16 A. IP44. Splashproof
Housing in plastic (PA). Unified flange, Cable area 1...2.5 mm²

Terminals/ Poles	Color code	Voltage V	Frequency Hz	Type	Order Code	Pkg qty	Weight pkg (1pce) kg
3P+E							
4	Blue	200...250	50 and 60	316BU9	2CMA163824R1000	10	0.13
3P+N+E							
5	Black	600...690	50 and 60	416BU5	2CMA100235R1000	10	0.14
	Red	346...415		416BU6	2CMA193468R1000		

32 A. IP44. Splashproof
Housing in plastic (PA). Unified flange, Cable area 2.5...6 mm²

Terminals/ Poles	Color code	Voltage V	Frequency Hz	Type	Order Code	Pkg qty	Weight pkg (1pce) kg
2P+E							
3	Grey		AC	232BU1	2CMA193437R1000	10	0.15
	Blue	200...250	50 and 60	232BU6	2CMA193434R1000		
3P+E							
4	Grey		AC	332BU1	2CMA193447R1000	10	0.17
	Black	600...690	50 and 60	332BU5	2CMA193441R1000		
	Red	380...415		332BU6	2CMA193442R1000		
	Blue	200...250		332BU9	2CMA193444R1000		
3P+N+E							
5	Grey		AC	432BU1	2CMA193455R1000	10	0.19
	Red	346...415	50 and 60	432BU6	2CMA193451R1000		

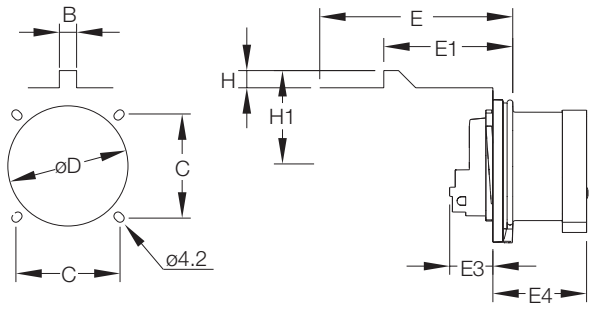

Dimensions (mm)

Type	B	C	D	E	E1	E3	E4	H	H1
316BU...	9	60-61	59	90	52.5	21.0	46.5	7	38.0
416BU...	9	60-61	59	90	52.5	21.0	46.5	7	38.0
232BU...	9	60-61	66	90	53.5	24.5	55.5	7	40.0
332BU...	9	60-61	66	90	53.5	24.5	55.5	7	40.0
432BU...	9	60-61	66	105	59.5	25.0	55.5	8	45.0

Socket outlet

for wall mounting, IP44

EASY & SAFE

216RS6

16 A. Splashproof
Housing in plastic (PA). Flexible membrane and metric threaded M20 insert for cop cable entry.
Rear knock-out cable entry. Cable area 1.5...4 mm²

Terminals/ Poles	Color code	Voltage	Frequency	Type	Order Code	Pkg qty	Weight pkg (1pce)
		V	Hz				kg
2P+E							
	Grey		AC	216RS1	2CMA193101R1000	10	0.22
	Yellow	100...130	50 and 60	216RS4	2CMA193097R1000		
	Blue	200...250		216RS6	2CMA193098R1000		
	Red	380...415		216RS9	2CMA193099R1000		
3	Grey	transf.		216RS12	2CMA193100R1000		
3P+E							
4	Grey		AC	316RS1	2CMA193111R1000	10	0.24
	Yellow	100...130	50 and 60	316RS4	2CMA193104R1000		
	Black	600...690		316RS5	2CMA193105R1000		
	Red	380...415		316RS6	2CMA193106R1000		
	Black	480...500		316RS7	2CMA193107R1000		
	Blue	200...250		316RS9	2CMA193108R1000		
	Green	**>50**	100...300	316RS10	2CMA193109R1000		
	Red	440...460	60	316RS11	2CMA193110R1000		
3P+N+E							
5	Grey		AC	416RS1	2CMA193119R1000	10	0.26
	Green	>50	>300...500	416RS2	2CMA193112R1000		
	Black	600..690	50 and 60	416RS5	2CMA126666R1000		
	Red	346...415		416RS6	2CMA193115R1000		
	Blue	208...250		416RS9	2CMA193117R1000		
	Red	440...460	60	416RS11	2CMA193118R1000		

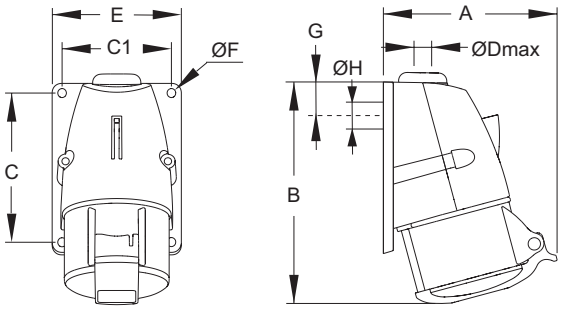

Dimensions (mm)

Type	A	B	C	C1	Dmax	E	F	G	H
216RS..	91	117	75	54	18/M20	66	5.5	27	23
316RS..	100	132	91	67	18/M20	79	5.5	30	23
416RS..	104	134	91	67	18/M20	79	5.5	30	23

Socket outlet

for wall mounting, IP44

EASY & SAFE

432RS6

32 A. Splashproof
Housing in plastic (PA). Flexible membrane and metric threaded M25 insert for cop cable entry.
Rear knock-out cable entry. Cable area 2.5...10 mm²

Terminals/ Poles	Color code	Voltage	Frequency	Type	Order Code	Pkg qty	Weight pkg (1pce)
		V	Hz				kg
2P+E							
3	Grey		AC	232RS1	2CMA193125R1000	10	0.30
	Yellow	100...130	50 and 60	232RS4	2CMA193121R1000		
	Blue	200...250		232RS6	2CMA193122R1000		
	Red	380...415		232RS9	2CMA193123R1000		
3P+E							
4	Grey		AC	332RS1	2CMA193135R1000	10	0.32
	Red	380/440	50/60	332RS3	2CMA193127R1000		
	Yellow	100...130	50 and 60	332RS4	2CMA193128R1000		
	Black	600...690		332RS5	2CMA193129R1000		
	Red	380...415		332RS6	2CMA193130R1000		
	Black	480...500		332RS7	2CMA193131R1000		
	Blue	200...250		332RS9	2CMA193132R1000		
	Green	>50	100...300	332RS10	2CMA193133R1000		
	Red	440...460	60	332RS11	2CMA193134R1000		
3P+N+E							
5	Grey		AC	432RS1	2CMA193143R1000	10	0.34
	Black	600...690	50 and 60	432RS5	2CMA126667R1000		
	Red	346...415		432RS6	2CMA193139R1000		
	Black	480...500		432RS7	2CMA193140R1000		
	Blue	208...250		432RS9	2CMA193141R1000		

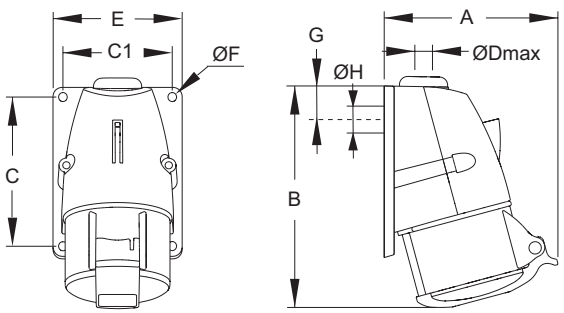

Dimensions (mm)

Type	A	B	C	C1	Dmax	E	F	G	H
232RS..	118	163	111	72	22/M25	85	5.5	34	29
332RS..	116	163	111	72	22/M25	85	5.5	34	29
432RS..	121	164	111	72	22/M25	85	5.5	34	29

Socket outlet

for wall mounting, IP44

EASY & SAFE

216ERT6

16 A. Watertight

Housing in plastic (PBT). Cable entry with knock-outs 2xM20 on top and 2xM25 on bottom. Cable area 1.5...4 mm²

Terminals/ Poles	Color code	Voltage	Frequency	Type	Order Code	Pkg qty	Weight pkg (1pce)
		V	Hz				kg
2P+E							
3	Grey		AC	216ERT1	2CMA101739R1000	1	0.36
	Green	>50	>300...500	216ERT2	2CMA101740R1000		
	Yellow	100...130	50 and 60	216ERT4	2CMA101719R1000		
	Blue	200...250		216ERT6	2CMA101742R1000		
	Grey	transf.		216ERT12	2CMA101743R1000		
3P+E							
4	Grey		AC	316ERT1	2CMA101744R1000	1	0.39
	Green	>50	>300...500	316ERT2	2CMA101745R1000		
	Yellow	100...130	50 and 60	316ERT4	2CMA101746R1000		
	Black	600...690		316ERT5	2CMA101747R1000		
	Red	380...415		316ERT6	2CMA101720R1000		
	Black	480...500		316ERT7	2CMA101748R1000		
	Blue	200...250		316ERT9	2CMA101721R1000		
	Green	>50	100...300	316ERT10	2CMA101749R1000		
	Red	440...460	60	316ERT11	2CMA101722R1000		
	Grey	transf.		316ERT12	2CMA101750R1000		
3P+N+E							
5	Grey		AC	416ERT1	2CMA101751R1000	10	0.41
	Green	>50	>300...500	416ERT2	2CMA101752R1000		
	Yellow	100...130	50 and 60	416ERT4	2CMA101753R1000		
	Red	346...415		416ERT6	2CMA101723R1000		
	Black	480...500		416ERT7	2CMA101754R1000		
	Blue	208...250		416ERT9	2CMA101755R1000		
	Red	440...460	60	416ERT11	2CMA101756R1000		

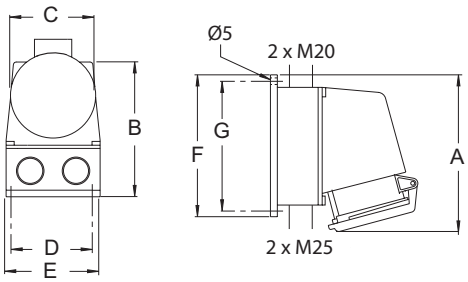

Dimensions (mm)

Type	A	B	C	D	E	F	6
216ERT...416ERT...	134	139	**82**	**71**	**80**	**120**	111

Socket outlet

for wall mounting, IP44

432ERT6

32 A. Watertight

Housing in plastic (PBT). Cable entry with knock-outs 2xM25 on top and 2xM25 on bottom. Cable area 2.5...10 mm²

Terminals/ Poles	Color code		Voltage	Frequency	Type	Order Code	Pkg qty	Weight pkg (1pce)
			V	Hz				kg
2P+E								
3		Green	>50	>300...500	232ERT2	2CMA101757R1000	1	0.42
		Yellow	100...130	50 and 60	232ERT4	2CMA101759R1000		
		Blue	200...250		232ERT6	2CMA101724R1000		
		Red	380...415		232ERT9	2CMA101760R1000		
		Grey	transf.		232ERT12	2CMA101761R1000		
3P+E								
4		Green	>50	>300...500	332ERT2	2CMA101762R1000	1	0.44
		Red	380/440	50/60	332ERT3	2CMA101763R1000		
		Yellow	100...130	50 and 60	332ERT4	2CMA101764R1000		
		Black	600...690		332ERT5	2CMA101765R1000		
		Red	380...415		332ERT6	2CMA101725R1000		
		Black	480...500		332ERT7	2CMA101766R1000		
		Blue	200...250		332ERT9	2CMA101726R1000		
		Green	>50	100...300	332ERT10	2CMA101767R1000		
		Red	440...460	60	332ERT11	2CMA101768R1000		
		Grey	transf.		332ERT12	2CMA101769R1000		
3P+N+E								
		Green	>50	>300...500	432ERT2	2CMA101770R1000	1	0.50
		Yellow	100...130	50 and 60	432ERT4	2CMA101771R1000		
		Red	346...415		432ERT6	2CMA101727R1000		
		Black	480...500		432ERT7	2CMA101772R1000		
		Blue	208...250		432ERT9	2CMA101773R1000		
		Red	440...460	60	432ERT11	2CMA101774R1000		

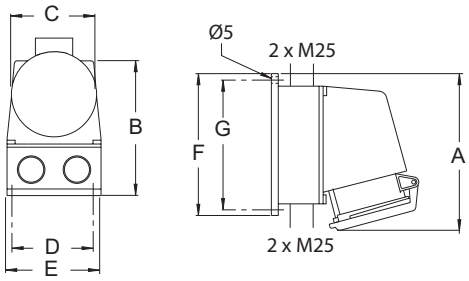

Dimensions (mm)

Type	A	B	C	D	E	F	G
232ERT...332ERT...	140	143	**88**	**71**	**80**	**120**	111
432ERT...	142	146	95	71	80	120	111

Socket outlet

for wall mounting, IP44

EASY & SAFE

263ERT6

63 A. Watertight

Housing in plastic (PBT). Cable entry with knock-outs 2 x Ø29/37 + 1 x Ø23 on top. 1 x Ø29 + 1 x Ø 23 from bottom. Cable area 6...25 mm²

Terminals/ Poles	Color code	Voltage V	Frequency Hz	Type	Order Code	Pkg qty	Weight pkg (1pce) kg
2P+E							
	Yellow	100...130	50 and 60	263ERT4	2CMA101894R1000	1	1.40
	Blue	200...250		263ERT6	2CMA101895R1000		
3P+E							
	Yellow	100...130	50 and 60	363ERT4	2CMA101888R1000	1	1.40
	Black	600...690		363ERT5	2CMA101889R1000		
	Red	380...415		363ERT6	2CMA101890R1000		
	Black	480...500		363ERT7	2CMA101891R1000		
	Blue	200...250		363ERT9	2CMA101892R1000		
	Red	440...460	60	363ERT11	2CMA101893R1000		
3P+N+E							
	Yellow	100...130	50 and 60	463ERT4	2CMA101884R1000	1	1.45
	Red	346...415		463ERT6	2CMA101885R1000		
	Blue	208...250		463ERT9	2CMA101886R1000		
	Red	440...460	60	463ERT11	2CMA101887R1000		

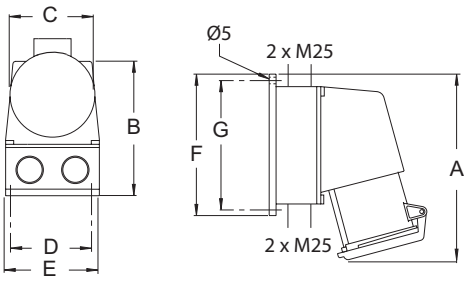

Dimensions (mm)

Type	A	B	C	D	E	F	6
263ERT...463ERT...	255	215	**108**	**129**	**150**	**187**	124

Socket outlet

for panel mounting with unified straight flange, IP44

EASY & SAFE

216RU6

16 A. Splashproof
Housing in plastic (PA). Cable area 1.5...4 mm²

Terminals/ Poles	Color code	Voltage	Frequency	Type	Order Code	Pkg qty	Weight pkg (1pce)
		V	Hz				kg
2P+E							
3	Grey		AC	216RU1	2CMA193173R1000	10	0.15
	Yellow	100...130	50 and 60	216RU4	2CMA193169R1000		
	Blue	200...250		216RU6	2CMA193170R1000		
	Red	380...415		216RU9	2CMA193171R1000		
	Grey	transf.		216RU12	2CMA193172R1000		
3P+E							
4	Grey		AC	316RU1	2CMA193183R1000	10	0.18
	Yellow	100...130	50 and 60	316RU4	2CMA193176R1000		
	Black	600...690		316RU5	2CMA193177R1000		
	Red	380...415		316RU6	2CMA193178R1000		
	Black	480...500		316RU7	2CMA193179R1000		
	Blue	200...250		316RU9	2CMA193180R1000		
	Green	>50	100...300	316RU10	2CMA193181R1000		
	Red	440...460	60	316RU11	2CMA193182R1000		
3P+N+E							
5	Grey		AC	416RU1	2CMA193191R1000	10	0.20
	Green	>50	>300...500	416RU2	2CMA193184R1000		
	Black	600...690	50 and 60	416RU5	2CMA126673R1000		
	Red	346...415		416RU6	2CMA193187R1000		
	Blue	208...250		416RU9	2CMA193189R1000		

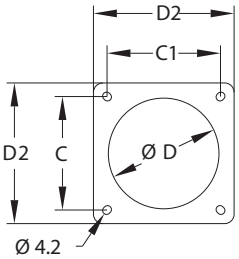

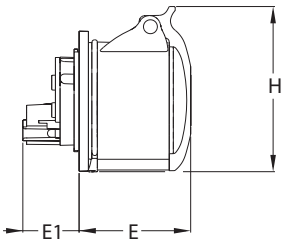

Dimensions (mm)

Type	C	C1	D	D2	E	E1	H
216RU..	60-61	60-61	49	75	56	29	79
316RU..	60-61	60-61	59	75	58	30	87
416RU..	60-61	60-61	59	75	60	31	89

Socket outlet

for panel mounting with unified straight flange, IP44

EASY & SAFE

432RU6

32 A. Splashproof
Housing in plastic (PA). Cable area 2.5...10 mm²

Terminals/ Poles	Color code		Voltage	Frequency	Type	Order Code	Pkg qty	Weight pkg (1pce)
			V	Hz				kg
2P+E								
3		Grey		AC	232RU1	2CMA193245R1000	10	0.21
		Yellow	100...130	50 and 60	232RU4	2CMA193241R1000		
		Blue	200...250		232RU6	2CMA193242R1000		
3P+E								
4		Grey		AC	332RU1	2CMA193255R1000	10	0.22
		Black	600...690	50 and 60	332RU5	2CMA193249R1000		
		Red	380...415		332RU6	2CMA193250R1000		
		Black	480...500		332RU7	2CMA193251R1000		
		Blue	200...250		332RU9	2CMA193252R1000		
3P+N+E								
5		Grey		AC	432RU1	2CMA193263R1000	10	0.24
		Black	600...690	50 and 60	432RU5	2CMA126674R1000		
		Red	346...415		432RU6	2CMA193259R1000		
		Blue	208...250		432RU9	2CMA101699R1000		

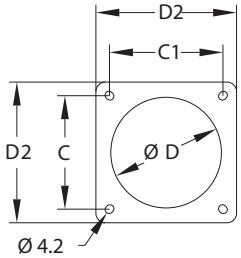

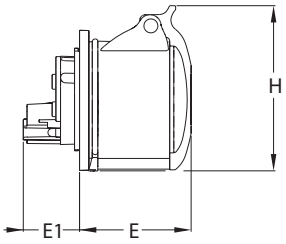

Dimensions (mm)

Type	C	C1	D	D2	E	E1	H
232RU..	60-61	60-61	66	75	70	34	93
332RU..	60-61	60-61	66	75	70	34	93
432RU..	60-61	60-61	66	75	71	34	99

Socket outlet

for panel mounting with unified angled flange, IP44

216RAU6

16 A. Splashproof
Housing in plastic (PA). Cable area 1.5...4 mm²

Terminals/ Poles	Color code	Voltage	Frequency	Type	Order Code	Pkg qty	Weight pkg (1pce)
		V	Hz				kg
2P+E							
3	Grey		AC	216RAU1	2CMA193221R1000	10	0.19
	Green	>50	300...500	216RAU2	2CMA101342R1000		
	Yellow	100...130	50 and 60	216RAU4	2CMA193217R1000		
	Blue	200...250		216RAU6	2CMA193218R1000		
	Red	380...415		216RAU9	2CMA193219R1000		
	Grey	transf.		216RAU12	2CMA193220R1000		
3P+E							
4	Grey		AC	316RAU1	2CMA193231R1000	10	0.22
	Yellow	100...130	50 and 60	316RAU4	2CMA193224R1000		
	Black	600...690		316RAU5	2CMA193225R1000		
	Red	380...415		316RAU6	2CMA193226R1000		
	Black	480...500		316RAU7	2CMA193227R1000		
	Blue	200...250		316RAU9	2CMA193228R1000		
	Green	>50	>300...500	316RAU10	2CMA193229R1000		
	Red	440...460	60	316RAU11	2CMA193230R1000		
3P+N+E							
5	Grey		AC	416RAU1	2CMA193239R1000	10	0.24
	Green	>50	300...500	416RAU2	2CMA193232R1000		
	Yellow	100...130	50 and 60	416RAU4	2CMA101343R1000		
	Black	600...690		416RAU5	2CMA126678R1000		
	Red	346...415		416RAU6	2CMA193235R1000		
	Blue	208...250		416RAU9	2CMA193237R1000		

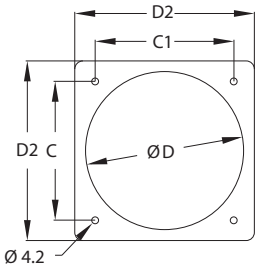

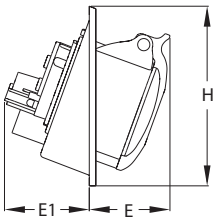

Dimensions (mm)

Type	C	C1	D	D2	E	E1	H
216RAU..	85	85	98	110	48	48	110
316RAU..	85	85	98	110	50	48	110
416RAU..	85	85	98	110	51	50	110

Socket outlet

for panel mounting with unified angled flange, IP44

EASY & SAFE

432RAU6

32 A. Splashproof
Housing in plastic (PA). Cable area 2.5...10 mm²

Terminals/ Poles	Color code		Voltage V	Frequency Hz	Type	Order Code	Pkg qty	Weight pkg (1pce) kg
2P+E								
		Grey		AC	232RAU1	2CMA193269R1000		
3		Yellow	100...130	50 and 60	232RAU4	2CMA193265R1000	10	0.25
		Blue	200...250		232RAU6	2CMA193266R1000		
3P+E								
4		Grey		AC	332RAU1	2CMA193279R1000	10	0.26
		Black	600...690	50 and 60	332RAU5	2CMA193273R1000		
		Red	380...415		332RAU6	2CMA193274R1000		
		Black	480...500		332RAU7	2CMA193275R1000		
		Blue	200...250		332RAU9	2CMA193276R1000		
3P+N+E								
5		Grey		AC	432RAU1	2CMA193287R1000	10	0.28
		Black	600...690	50 and 60	432RAU5	2CMA126679R1000		
		Red	346...415		432RAU6	2CMA193283R1000		

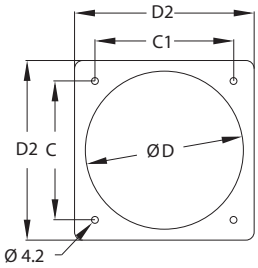

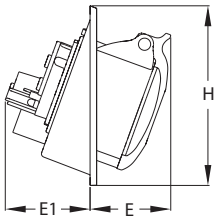

Dimensions (mm)

Type	C	C1	D	D2	E	E1	H
232RAU...	85	85	98	110	61	53	110
332RAU...	85	85	98	110	61	53	110
432RAU...	85	85	98	110	63	54	110

Socket outlet

for panel mounting with minimized straight flange, IP44

216R6

16 A. Splashproof
Housing in plastic (PA). Cable area 1.5...4 mm²

Terminals/ Poles	Color code		Voltage V	Frequency Hz	Type	Order Code	Pkg qty	Weight pkg (1pce) kg
2P+E								
3		Yellow	100...130	50 and 60	216R4	2CMA193145R1000	10	0.14
		Blue	200...250		216R6	2CMA193146R1000		
		Red	380...415		216R9	2CMA193147R1000		
		Grey	transf.		216R12	2CMA193148R1000		
3P+E								
4		Grey		AC	316R1	2CMA193159R1000	10	0.17
		Yellow	100...130	50 and 60	316R4	2CMA193152R1000		
		Black	600...690		316R5	2CMA193153R1000		
		Red	380...415		316R6	2CMA193154R1000		
		Black	480...500		316R7	2CMA193155R1000		
		Blue	200...250		316R9	2CMA193156R1000		
		Green	>50	100...300	316R10	2CMA193157R1000		
		Red	440...460	60	316R11	2CMA193158R1000		
3P+N+E								
5		Grey		AC	416R1	2CMA193167R1000	10	0.19
		Green	>50	>300...500	416R2	2CMA193160R1000		
		Red	346...415		416R6	2CMA193163R1000		
		Blue	208...250	50 and 60	416R9	2CMA193165R1000		

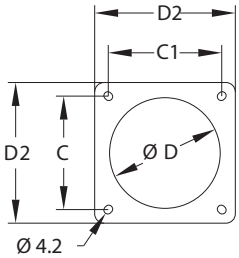

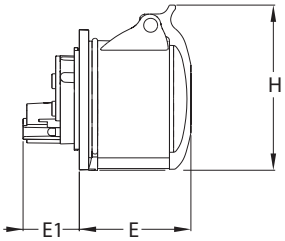

Dimensions (mm)

Type	C	C1	D	D2	E	E1	H
216R..	44-47	44-47	49	56	56	29	73
316R..	50-52	50-52	59	66	58	30	87
416R..	50-52	50-52	59	66	60	31	89

Socket outlet

for panel mounting with minimized angled flange, IP44

EASY & SAFE

216RAM6

16 A. Splashproof
Housing in plastic (PA). Cable area 1.5...4 mm²

Terminals/ Poles	Color code	Voltage V	Frequency Hz	Type	Order Code	Pkg qty	Weight pkg (1pce) kg
2P+E							
3	Grey		AC	216RAM1	2CMA170007R1000	10	0.21
	Yellow	100...130	50 and 60	216RAM4	2CMA170003R1000		
	Blue	200...250		216RAM6	2CMA170004R1000		
	Red	380...415		216RAM9	2CMA170005R1000		
	Grey	transf.		216RAM12	2CMA170006R1000		
3P+E							
4	Grey		AC	316RAM1	2CMA170017R1000	10	0.22
	Yellow	100...130	50 and 60	316RAM4	2CMA170010R1000		
	Black	600...690		316RAM5	2CMA170011R1000		
	Red	380...415		316RAM6	2CMA170012R1000		
	Black	480...500		316RAM7	2CMA170013R1000		
	Blue	200...250		316RAM9	2CMA170014R1000		
	Green	> 50	100...300	316RAM10	2CMA170015R1000		
	Red	440...460	60	316RAM11	2CMA170016R1000		
3P+N+E							
5	Grey		AC	416RAM1	2CMA170025R1000	10	0.24
	Green	> 50	>300...500	416RAM2	2CMA170018R1000		
	Red	346...415	50 and 60	416RAM6	2CMA170021R1000		
	Blue	208...250		416RAM9	2CMA170023R1000		

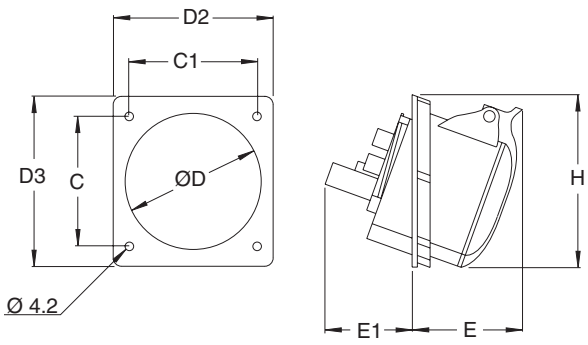

Dimensions (mm)

Type	C	C1	D	D2	D3	E	E1	H
216RAM..	55	55	63	70	78	53	42	76
316RAM..	66	66	78	83	89	53	46	85
416RAM..	66	66	78	83	89	55	48	89

Socket outlet

for panel mounting with minimized angled flange, IP44

332RAM6

32 A. Splashproof
Housing in plastic (PA). Cable area 2.5...10 mm²

Terminals/ Poles	Color code		Voltage V	Frequency Hz	Type	Order Code	Pkg qty	Weight pkg (1pce) kg
2P+E								
3		Grey		AC	232RAM1	2CMA170030R1000	10	0.21
		Grey	> 50...250	DC	232RAM3	2CMA100856R1000		
		Yellow	100...130	50 and 60	232RAM4	2CMA170026R1000		
		Blue	200...250		232RAM6	2CMA170027R1000		
3P+E								
4		Grey		AC	332RAM1	2CMA170040R1000	10	0.22
		Black	600...690	50 and 60	332RAM5	2CMA170034R1000		
		Red	380...415		332RAM6	2CMA170035R1000		
		Black	480...500		332RAM7	2CMA170036R1000		
		Blue	200...250		332RAM9	2CMA170037R1000		
3P+N+E								
5		Grey		AC	432RAM1	2CMA170048R1000	10	0.24
		Red	346...415	50 and 60	432RAM6	2CMA170044R1000		

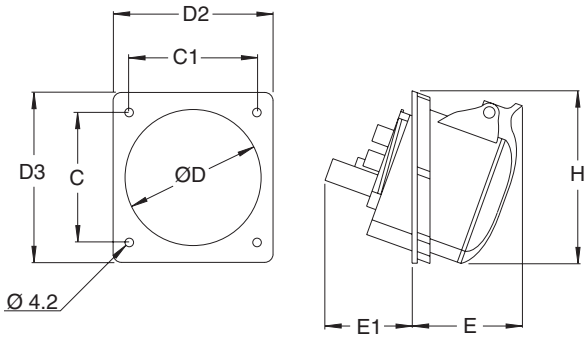

Dimensions (mm)

Type	C	C1	D	D2	D3	E	E1	H
232RAM...	75	75	87	93	99	61	52	98
332RAM...	75	75	87	93	99	61	52	98
432RAM...	75	75	87	93	99	64	52	101

New watertight Easy & Safe

Our new IP67 Easy & Safe is a perfect choice in most applications where water and dirt can occur. They combine easy access to contact parts during installation with high protection degree while the products are in use. Electrical contacts protected against liquids and dirt retains its performance over time. High contact performance means reliability, reducing downtime and lowers maintenance costs.

Plugs

IP67

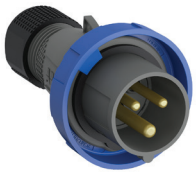

216EP6W

16 A. Watertight

Housing in plastic (PA). Cable entry with compression gland. Cable area 1...2.5 mm²

Terminals/ Poles	Color code	Voltage	Frequency	Type	Order Code	Pkg qty	Weight pkg (1pce)
		V	Hz				kg
2P+E							
3	Grey		AC	216EP1W	2CMA101069R1000	10	0.13
	Yellow	100...130	50 and 60	216EP4W	2CMA101071R1000		
	Blue	200...250		216EP6W	2CMA101072R1000		
	Red	380...415		216EP9W	2CMA101073R1000		
	Grey	transf		216EP12W	2CMA101074R1000		
3P+E							
4	Grey		AC	316EP1W	2CMA101075R1000	10	0.19
	Green	>50	>300...500	316EP2W	2CMA101076R1000		
	Red	380/440	50/60	316EP3W	2CMA101077R1000		
	Yellow	100...130	50 and 60	316EP4W	2CMA101078R1000		
	Black	600...690		316EP5W	2CMA101079R1000		
	Red	380...415		316EP6W	2CMA101080R1000		
	Black	480...500		316EP7W	2CMA101081R1000		
	Blue	200...250		316EP9W	2CMA101082R1000		
	Green	>50	100...300	316EP10W	2CMA101083R1000		
	Red	440...460	60	316EP11W	2CMA101084R1000		
3P+N+E							
5	Grey		AC	416EP1W	2CMA101085R1000	10	0.21
	Green	>50	>300...500	416EP2W	2CMA101086R1000		
	Red	380...440	50/60	416EP3W	2CMA101087R1000		
	Yellow	100...130	50 and 60	416EP4W	2CMA101088R1000		
	Red	346...415		416EP6W	2CMA101089R1000		
	Black	480...500		416EP7W	2CMA101090R1000		
	Blue	208...250		416EP9W	2CMA101091R1000		
	Red	440...460	60	416EP11W	2CMA101092R1000		

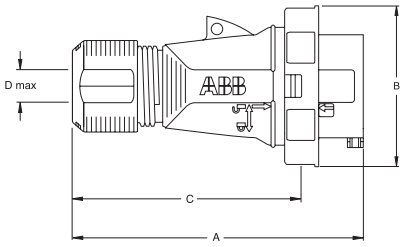

Dimensions (mm)

Type	A	B	C	Dmax
216EP...W	134	73	100	14
316EP...W	161	81	127	17
416EP...W	158	87	125	17

Plugs

IP67

EASY & SAFE

432EP6W

32 A. Watertight

Housing in plastic (PA). Cable entry with compression gland. Cable area 2.5...6 mm²

Terminals/ Poles	Color code	Voltage	Frequency	Type	Order Code	Pkg qty	Weight pkg (1pce)
		V	Hz				kg
2P+E							
3	Grey		AC	232EP1W	2CMA101093R1000	10	0.23
	Yellow	100...130	50 and 60	232EP4W	2CMA101094R1000		
	Blue	200...250		232EP6W	2CMA101095R1000		
	Red	380...415		232EP9W	2CMA101096R1000		
	Grey	transf		232EP12W	2CMA101097R1000		
3P+E							
4	Grey		AC	332EP1W	2CMA101098R1000	10	0.25
	Green	>50	>300...500	332EP2W	2CMA101099R1000		
	Red	380/440	50/60	332EP3W	2CMA101100R1000		
	Yellow	100...130	50 and 60	332EP4W	2CMA101101R1000		
	Black	600...690		332EP5W	2CMA101102R1000		
	Red	380...415		332EP6W	2CMA101103R1000		
	Black	480...500		332EP7W	2CMA101104R1000		
	Blue	200...250		332EP9W	2CMA101105R1000		
	Green	>50	100...300	332EP10W	2CMA101106R1000		
	Red	440...460	60	332EP11W	2CMA101107R1000		
3P+N+E							
5	Grey		AC	432EP1W	2CMA101108R1000	10	0.25
	Green	>50	>300...500	432EP2W	2CMA101109R1000		
	Red	380...440	50/60	432EP3W	2CMA101110R1000		
	Yellow	100...130	50 and 60	432EP4W	2CMA101111R1000		
	Red	346...415		432EP6W	2CMA101112R1000		
	Black	480...500		432EP7W	2CMA101113R1000		
	Blue	208...250		432EP9W	2CMA101114R1000		
	Red	440...460	60	432EP11W	2CMA101115R1000		

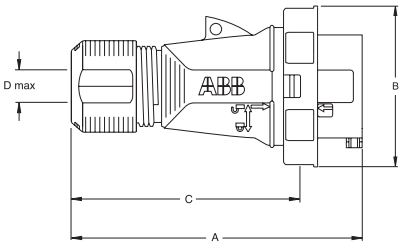

Dimensions (mm)

Type	A	B	C	Dmax
232EP...W	183	91	141	22
332EP...W	183	91	141	22
432EP...W	183	99	141	22

Connectors

IP67

216EC6W

16 A. Watertight
Housing in plastic (PA). Cable entry with compression gland. Cable area 1...2.5 mm²

Terminals/ Poles	Color code	Voltage	Frequency	Type	Order Code	Pkg qty	Weight pkg (1pce)
		V	Hz				kg
2P+E							
3	Grey		AC	216EC1W	2CMA101116R1000	10	0.17
	Yellow	100...130	50 and 60	216EC4W	2CMA101118R1000		
	Blue	200...250		216EC6W	2CMA101119R1000		
	Red	380...415		216EC9W	2CMA101120R1000		
	Grey	transf		216EC12W	2CMA101121R1000		
3P+E							
4	Grey		AC	316EC1W	2CMA101122R1000	10	0.23
	Green	>50	>300...500	316EC2W	2CMA101123R1000		
	Red	380/440	50/60	316EC3W	2CMA101124R1000		
	Yellow	100...130	50 and 60	316EC4W	2CMA101125R1000		
	Black	600...690		316EC5W	2CMA101126R1000		
	Red	380...415		316EC6W	2CMA101127R1000		
	Black	480...500		316EC7W	2CMA101128R1000		
	Blue	200...250		316EC9W	2CMA101129R1000		
	Green	>50	100...300	316EC10W	2CMA101130R1000		
	Red	440...460	60	316EC11W	2CMA101131R1000		
3P+N+E							
5	Grey		AC	416EC1W	2CMA101132R1000	10	0.26
	Green	>50	>300...500	416EC2W	2CMA101133R1000		
	Red	380...440	50/60	416EC3W	2CMA101134R1000		
	Yellow	100...130	50 and 60	416EC4W	2CMA101135R1000		
	Red	346...415		416EC6W	2CMA101136R1000		
	Black	480...500		416EC7W	2CMA101137R1000		
	Blue	208...250		416EC9W	2CMA101138R1000		
	Red	440...460	60	416EC11W	2CMA101139R1000		

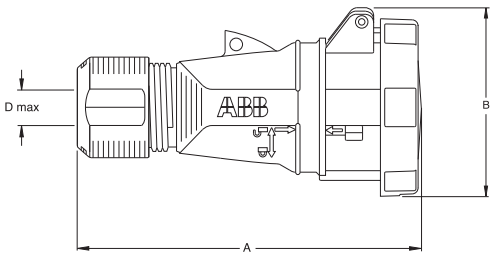

Dimensions (mm)

Type	A	B	Dmax
216EC...W	146	81	14
316EC...W	169	88	17
416EC...W	169	92	17

Connectors

IP67

EASY & SAFE

432EC6W

32 A. Watertight

Housing in plastic (PA). Cable entry with compression gland. Cable area 2.5...6 mm²

Terminals/ Poles	Color code	Voltage	Frequency	Type	Order Code	Pkg qty	Weight pkg (1pce)
		V	Hz				kg
2P+E							
3	Grey		AC	232EC1W	2CMA101140R1000	10	0.28
	Yellow	100...130	50 and 60	232EC4W	2CMA101141R1000		
	Blue	200...250		232EC6W	2CMA101142R1000		
	Red	380...415		232EC9W	2CMA101143R1000		
	Grey	transf		232EC12W	2CMA101144R1000		
3P+E							
4	Grey		AC	332EC1W	2CMA101145R1000	10	0.30
	Green	>50	>300...500	332EC2W	2CMA101146R1000		
	Red	380/440	50/60	332EC3W	2CMA101147R1000		
	Yellow	100...130	50 and 60	332EC4W	2CMA101148R1000		
	Black	600...690		332EC5W	2CMA101149R1000		
	Red	380...415		332EC6W	2CMA101150R1000		
	Black	480...500		332EC7W	2CMA101151R1000		
	Blue	200...250		332EC9W	2CMA101152R1000		
	Green	>50	100...300	332EC10W	2CMA101153R1000		
	Red	440...460	60	332EC11W	2CMA101154R1000		
3P+N+E							
5	Grey		AC	432EC1W	2CMA101155R1000	10	0.30
	Green	>50	>300...500	432EC2W	2CMA101156R1000		
	Red	380...440	50/60	432EC3W	2CMA101157R1000		
	Yellow	100...130	50 and 60	432EC4W	2CMA101158R1000		
	Red	346...415		432EC6W	2CMA101159R1000		
	Black	480...500		432EC7W	2CMA101160R1000		
	Blue	208...250		432EC9W	2CMA101161R1000		
	Red	440...460	60	432EC11W	2CMA101162R1000		

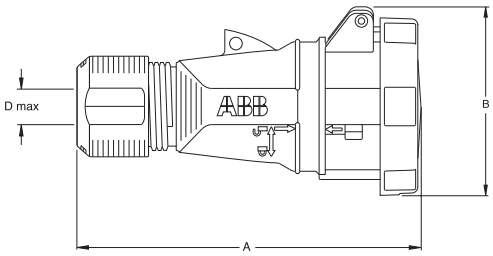

Dimensions (mm)

Type	A	B	Dmax
232EC...W	195	98	22
332EC...W	195	98	22
432EC...W	195	104	22

Inlets

for wall mounting, IP67

EASY & SAFE

216EBS6W

16 A. Watertight
Housing in plastic (PA). Cable gland included. Cable area 1...2.5 mm²

Terminals/ Poles	Color code	Voltage	Frequency	Type	Order Code	Pkg qty	Weight pkg (1pce)
		V	Hz				kg
2P+E							
3	Grey		AC	216EBS1W	2CMA101163R1000	10	0.20
	Yellow	100...130	50 and 60	216EBS4W	2CMA101165R1000		
	Blue	200...250		216EBS6W	2CMA101166R1000		
	Red	380...415		216EBS9W	2CMA101167R1000		
	Grey	transf		216EBS12W	2CMA101168R1000		
3P+E							
4	Grey		AC	316EBS1W	2CMA101169R1000	10	0.23
	Green	>50	>300...500	316ESB2W	2CMA101170R1000		
	Red	380/440	50/60	316EBS3W	2CMA101171R1000		
	Yellow	100...130	50 and 60	316EBS4W	2CMA101172R1000		
	Black	600...690		316EBS5W	2CMA101173R1000		
	Red	380...415		316EBS6W	2CMA101174R1000		
	Black	480...500		316EBS7W	2CMA101175R1000		
	Blue	200...250		316EBS9W	2CMA101176R1000		
	Green	>50	100...300	316EBS10W	2CMA101177R1000		
	Red	440...460	60	316EBS11W	2CMA101178R1000		
3P+N+E							
5	Grey		AC	416EBS1W	2CMA101179R1000	10	0.25
	Green	>50	>300...500	416EBS2W	2CMA101180R1000		
	Red	380...440	50/60	416EBS3W	2CMA101181R1000		
	Yellow	100...130	50 and 60	416EBS4W	2CMA101182R1000		
	Red	346...415		416EBS6W	2CMA101183R1000		
	Black	480...500		416EBS7W	2CMA101184R1000		
	Blue	208...250		416EBS9W	2CMA101185R1000		
	Red	440...460	60	416EBS11W	2CMA101186R1000		

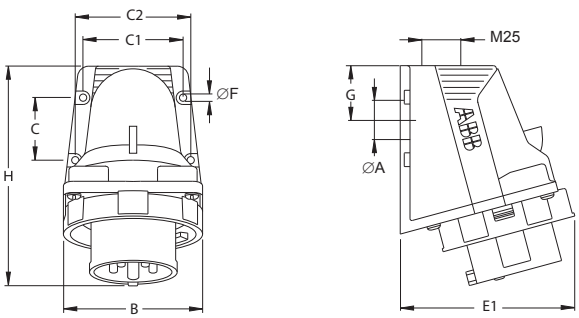

Dimensions (mm)

Type	A	B	C	C1	C2	E1	ØF	G	H
216EBS...W	25	88.5	40	63.5	73.5	112	4.5	34.75	135
316EBS...W	25	88.5	40	63.5	73.5	108	4.5	34.75	138
416EBS...W	25	88.5	40	63.5	73.5	112	4.5	34.75	140

Inlets

for wall mounting, IP67

EASY & SAFE

432EBS6W

32 A. Watertight
Housing in plastic (PA). Cable gland included. Cable area 2.5...6 mm²

Terminals/ Poles	Color code	Voltage	Frequency	Type	Order Code	Pkg qty	Weight pkg (1pce)
		V	Hz				kg
2P+E							
3	Grey		AC	232EBS1W	2CMA101187R1000	10	0.26
	Yellow	100...130	50 and 60	232EBS4W	2CMA101188R1000		
	Blue	200...250		232EBS6W	2CMA101189R1000		
	Red	380...415		232EBS9W	2CMA101190R1000		
	Grey	transf		232EBS12W	2CMA101191R1000		
3P+E							
4	Grey		AC	332EBS1W	2CMA101192R1000	10	0.27
	Green	>50	>300...500	332EBS2W	2CMA101193R1000		
	Red	380/440	50/60	332EBS3W	2CMA101194R1000		
	Yellow	100...130	50 and 60	332EBS4W	2CMA101195R1000		
	Black	600...690		332EBS5W	2CMA101196R1000		
	Red	380...415		332EBS6W	2CMA101197R1000		
	Black	480...500		332EBS7W	2CMA101198R1000		
	Blue	200...250		332EBS9W	2CMA101199R1000		
	Green	>50	100...300	332EBS10W	2CMA101200R1000		
	Red	440...460	60	332EBS11W	2CMA101201R1000		
3P+N+E							
5	Grey		AC	432EBS1W	2CMA101202R1000	10	0.28
	Green	>50	>300...500	432EBS2W	2CMA101203R1000		
	Red	380...440	50/60	432EBS3W	2CMA101204R1000		
	Yellow	100...130	50 and 60	432EBS4W	2CMA101205R1000		
	Red	346...415		432EBS6W	2CMA101206R1000		
	Black	480...500		432EBS7W	2CMA101207R1000		
	Blue	208...250		432EBS9W	2CMA101208R1000		
	Red	440...460	60	432EBS11W	2CMA101209R1000		

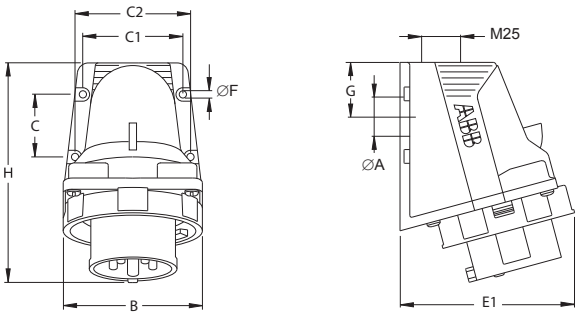

Dimensions (mm)

Type	A	B	C	C1	C2	E1	ØF	G	H
232EBS...W	25	91	40	63.5	73.5	106	4.5	34.75	150
332EBS...W	25	91	40	63.5	73.5	106	4.5	34.75	150
432EBS...W	25	99	40	63.5	73.5	110	4.5	34.75	152

Inlets

for panel mounting with unified straight flange, IP67

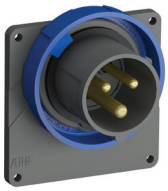

216EBU6W

16 A. Watertight
Housing in plastic (PA). Cable area 1...2.5 mm²

Terminals/ Poles	Color code	Voltage	Frequency	Type	Order Code	Pkg qty	Weight pkg (1pce)
		V	Hz				kg
2P+E							
3	Grey		AC	216EBU1W	2CMA101257R1000	10	0.11
	Yellow	100...130	50 and 60	216EBU4W	2CMA101258R1000		
	Blue	200...250		216EBU6W	2CMA101259R1000		
	Red	380...415		216EBU9W	2CMA101260R1000		
3P+E							
4	Grey		AC	316EBU1W	2CMA101261R1000	10	0.14
	Yellow	100...130	50 and 60	316EBU4W	2CMA101262R1000		
	Black	600...690		316EBU5W	2CMA101263R1000		
	Red	380...415		316EBU6W	2CMA101264R1000		
	Black	480...500		316EBU7W	2CMA101265R1000		
	Blue	200...250		316EBU9W	2CMA101266R1000		
	Red	440...460	60	316EBU11W	2CMA101267R1000		
3P+N+E							
5	Grey		AC	416EBU1W	2CMA101268R1000	10	0.16
	Yellow	100...130	50 and 60	416EBU4W	2CMA101269R1000		
	Red	346...415		416EBU6W	2CMA101270R1000		
	Black	480...500		416EBU7W	2CMA101271R1000		
	Blue	208...250		416EBU9W	2CMA101812R1000		
	Red	440...460	60	416EBU11W	2CMA101272R1000		

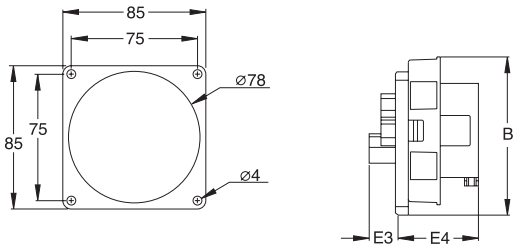

Dimensions (mm)

Type	B	E3	E4
216EBU...W	94	17	48.5
316EBU...W	90	17	48.5
416EBU...W	93.5	17	48.5

Inlets

for panel mounting with unified straight flange, IP67

EASY & SAFE

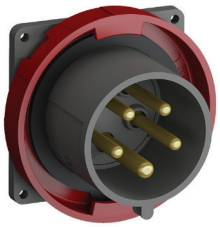

432EBU6W

32 A. Watertight
Housing in plastic (PA). Cable area 2.5...6 mm²

Terminals/ Poles	Color code	Voltage V	Frequency Hz	Type	Order Code	Pkg qty	Weight pkg (1pce) kg
2P+E							
3	Grey		AC	232EBU1W	2CMA101273R1000	10	0.17
	Yellow	100...130	50 and 60	232EBU4W	2CMA101274R1000		
	Blue	200...250		232EBU6W	2CMA101275R1000		
	Red	380...415		232EBU9W	2CMA101813R1000		
3P+E							
4	Grey		AC	332EBU1W	2CMA101276R1000	10	0.18
	Red	380/440	50/60	332EBU3W	2CMA101277R1000		
	Yellow	100...130	50 and 60	332EBU4W	2CMA101278R1000		
	Red	380...415		332EBU6W	2CMA101279R1000		
	Black	480...500		332EBU7W	2CMA101280R1000		
	Blue	200...250		332EBU9W	2CMA101281R1000		
	Red	440...460	60	332EBU11W	2CMA101282R1000		
3P+N+E							
5	Grey		AC	432EBU1W	2CMA101283R1000	10	0.19
	Yellow	100...130	50 and 60	432EBU4W	2CMA101284R1000		
	Red	346...415		432EBU6W	2CMA101285R1000		
	Black	480...500		432EBU7W	2CMA101286R1000		
	Blue	208...250		432EBU9W	2CMA101287R1000		
	Red	440...460	60	432EBU11W	2CMA101288R1000		

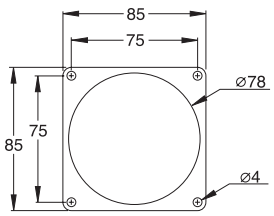

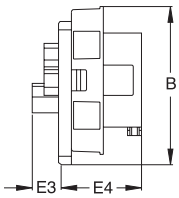

Dimensions (mm)

Type	B	E3	E4
232EBU...W	91	16	58
332EBU...W	91	16	58
432EBU...W	99	16	58

Socket outlet

for wall mounting, IP67

EASY & SAFE

216ERS6W

16 A. Watertight
Housing in plastic (PA). Cable gland included. Cable area 1.5...4 mm²

Terminals/ Poles	Color code	Voltage	Frequency	Type	Order Code	Pkg qty	Weight pkg (1pce)
		V	Hz				kg
2P+E							
3	Grey		AC	216ERS1W	2CMA101210R1000	10	0.24
	Yellow	100...130	50 and 60	216ERS4W	2CMA101212R1000		
	Blue	200...250		216ERS6W	2CMA101213R1000		
	Red	380...415		216ERS9W	2CMA101214R1000		
	Grey	transf		216ERS12W	2CMA101215R1000		
3P+E							
4	Grey		AC	316ERS1W	2CMA101216R1000	10	0.27
	Green	>50	>300...500	316ERB2W	2CMA101217R1000		
	Red	380/440	50/60	316ERS3W	2CMA101218R1000		
	Yellow	100...130	50 and 60	316ERS4W	2CMA101219R1000		
	Black	600...690		316ERS5W	2CMA101220R1000		
	Red	380...415		316ERS6W	2CMA101221R1000		
	Black	480...500		316ERS7W	2CMA101222R1000		
	Blue	200...250		316ERS9W	2CMA101223R1000		
	Green	>50	100...300	316ERS10W	2CMA101224R1000		
	Red	440...460	60	316ERS11W	2CMA101225R1000		
3P+N+E							
5	Grey		AC	416ERS1W	2CMA101226R1000	10	0.30
	Green	>50	>300...500	416ERS2W	2CMA101227R1000		
	Red	380...440	50/60	416ERS3W	2CMA101228R1000		
	Yellow	100...130	50 and 60	416ERS4W	2CMA101229R1000		
	Red	346...415		416ERS6W	2CMA101230R1000		
	Black	480...500		416ERS7W	2CMA101231R1000		
	Blue	208...250		416ERS9W	2CMA101232R1000		
	Red	440...460	60	416ERS11W	2CMA101233R1000		

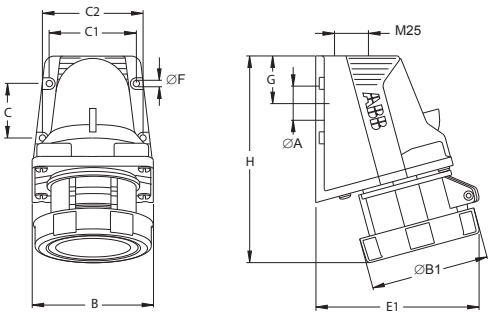

Dimensions (mm)

Type	A	B	ØB1	C	C1	C2	E1	ØF	G	H
216ERS...W	25	88.5	73	40	63.5	73.5	112	4.5	34.75	147
316ERS...W	25	88.5	81	40	63.5	73.5	117	4.5	34.75	150
416ERS...W	25	88.5	87	40	63.5	73.5	119	4.5	34.75	151

Socket outlet

for wall mounting, IP67

EASY & SAFE

432ERS6W

32 A. Watertight
Housing in plastic (PA). Cable gland included. Cable area 2.5...10 mm²

Terminals/ Poles	Color code	Voltage	Frequency	Type	Order Code	Pkg qty	Weight pkg (1pce)
		V	Hz				kg
2P+E							
3	Grey		AC	232ERS1W	2CMA101234R1000	10	0.31
	Yellow	100...130	50 and 60	232ERS4W	2CMA101235R1000		
	Blue	200...250		232ERS6W	2CMA101236R1000		
	Red	380...415		232ERS9W	2CMA101237R1000		
	Grey	transf		232ERS12W	2CMA101238R1000		
3P+E							
4	Grey		AC	332ERS1W	2CMA101239R1000	10	0.32
	Green	>50	>300...500	332ERS2W	2CMA101240R1000		
	Red	380/440	50/60	332ERS3W	2CMA101241R1000		
	Yellow	100...130	50 and 60	332ERS4W	2CMA101242R1000		
	Black	600...690		332ERS5W	2CMA101243R1000		
	Red	380...415		332ERS6W	2CMA101244R1000		
	Black	480...500		332ERS7W	2CMA101245R1000		
	Blue	200...250		332ERS9W	2CMA101246R1000		
	Green	>50	100...300	332ERS10W	2CMA101248R1000		
	Red	440...460	60	332ERS11W	2CMA101247R1000		
3P+N+E							
5	Grey		AC	432ERS1W	2CMA101249R1000	10	0.32
	Green	>50	>300...500	432ERS2W	2CMA101250R1000		
	Red	380...440	50/60	432ERS3W	2CMA101251R1000		
	Yellow	100...130	50 and 60	432ERS4W	2CMA101252R1000		
	Red	346...415		432ERS6W	2CMA101253R1000		
	Black	480...500		432ERS7W	2CMA101254R1000		
	Blue	208...250		432ERS9W	2CMA101255R1000		
	Red	440...460	60	432ERS11W	2CMA101256R1000		

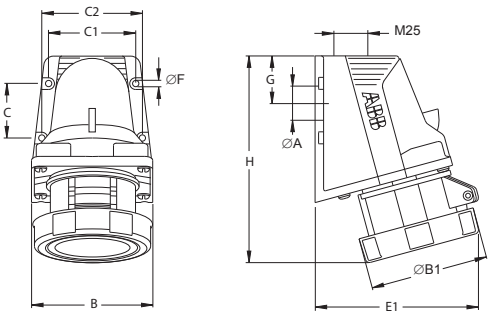

Dimensions (mm)

Type	A	B	ØB1	C	C1	C2	E1	ØF	G	H
232ERS...W	25	88.5	91	40	63.5	73.5	117	4.5	**34.75**	163
332ERS...W	25	88.5	91	40	63.5	73.5	117	4.5	**34.75**	163
432ERS...W	25	88.5	99	40	63.5	73.5	120	4.5	**34.75**	164

Socket outlet

for wall mounting, IP67

216ERT6W

16 A. Watertight
Housing in plastic (PBT). Cable entry with knock-outs 2xM20 on top and 2xM25 on bottom. Cable area 1.5...4 mm²

Terminals/ Poles	Color code	Voltage	Frequency	Type	Order Code	Pkg qty	Weight pkg (1pce)
		V	Hz				kg
2P+E							
3	Yellow	100...130	50 and 60	216ERT4W	2CMA101728R1000	1	0.33
	Blue	200...250		216ERT6W	2CMA101729R1000		
	Red	380...415		216ERT9W	2CMA101776R1000		
	Grey	transf.		216ERT12W	2CMA101777R1000		
3P+E							
4	Green	>50	>300...500	316ERT2W	2CMA101778R1000	1	0.35
	Yellow	100...130	50 and 60	316ERT4W	2CMA101779R1000		
	Black	600...690		316ERT5W	2CMA101780R1000		
	Red	380...415		316ERT6W	2CMA101730R1000		
	Black	480...500		316ERT7W	2CMA101781R1000		
	Blue	200...250		316ERT9W	2CMA101731R1000		
	Green	>50	100...300	316ERT10W	2CMA101782R1000		
	Red	440...460	60	316ERT11W	2CMA101732R1000		
	Grey	transf.		316ERT12W	2CMA101783R1000		
3P+N+E							
5	Yellow	100...130	50 and 60	416ERT4W	2CMA101784R1000	1	0.39
	Red	346...415		416ERT6W	2CMA101733R1000		
	Black	480...500		416ERT7W	2CMA101785R1000		
	Blue	208...250		416ERT9W	2CMA101786R1000		
	Green	>50	100...300	416ERT10W	2CMA101787R1000		
	Red	440...460	60	416ERT11W	2CMA101788R1000		

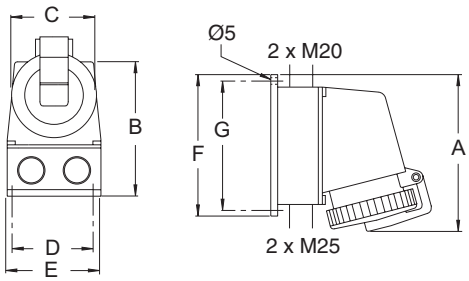

Dimensions (mm)

Type	A	B	C	D	E	F	6
216ERT...W...416ERT...W	134	139	**82**	**71**	**80**	**120**	111

Socket outlet

for wall mounting, IP67

EASY & SAFE

432ERT6W

32 A. Watertight

Housing in plastic (PBT). Cable entry with knock-outs 2xM25 on top and 2xM25 on bottom. Cable area 2.5...10 mm²

Terminals/ Poles	Color code	Voltage	Frequency	Type	Order Code	Pkg qty	Weight pkg (1pce)
		V	Hz				kg
2P+E							
3	Yellow	100...130	50 and 60	232ERT4W	2CMA101790R1000	1	0.37
	Blue	200...250		232ERT6W	2CMA101791R1000		
	Red	380...415		232ERT9W	2CMA101792R1000		
	Grey	transf.		232ERT12W	2CMA101793R1000		
3P+E							
4	Green	>50	>300...500	332ERT2W	2CMA101794R1000	1	0.42
	Red	380/440	50/60	332ERT3W	2CMA101734R1000		
	Yellow	100...130	50 and 60	332ERT4W	2CMA101795R1000		
	Black	600...690		332ERT5W	2CMA101796R1000		
	Red	380...415		332ERT6W	2CMA101735R1000		
	Black	480...500		332ERT7W	2CMA101797R1000		
	Blue	200...250		332ERT9W	2CMA101736R1000		
	Green	>50	100...300	332ERT10W	2CMA101798R1000		
	Red	440...460	60	332ERT11W	2CMA101737R1000		
	Grey	transf.		332ERT12W	2CMA101799R1000		
3P+N+E							
	Green	>50	>300...500	432ERT2W	2CMA101800R1000	1	0.47
	Yellow	100...130	50 and 60	432ERT4W	2CMA101801R1000		
	Red	346...415		432ERT6W	2CMA101738R1000		
	Black	480...500		432ERT7W	2CMA101802R1000		
	Blue	208...250		432ERT9W	2CMA101803R1000		
	Red	440...460	60	432ERT11W	2CMA101804R1000		

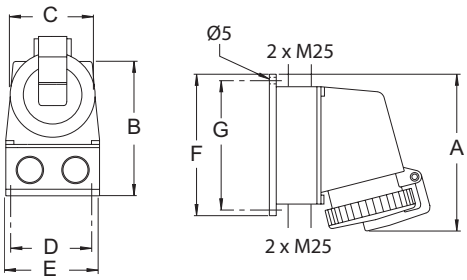

Dimensions (mm)

Type	A	B	C	D	E	F	6
232ERT...W...332ERT...W	140	143	**88**	**71**	**80**	**120**	111
432ERT...W	142	146	95	71	80	120	111

Socket outlet

for wall mounting, IP67

EASY & SAFE

463ERT6W

63 A. Watertight

Housing in plastic (PBT). Cable entry with knock-outs 2 x Ø29/37 + 1 x Ø23 on top. 1 x Ø29 + 1 x Ø 23 from bottom. Cable area 6...25 mm²

Terminals/ Poles	Color code		Voltage	Frequency	Type	Order Code	Pkg qty	Weight pkg (1pce)
			V	Hz				kg
3P+E								
4	■	Black	600...690	50 and 60	363ERT5W	2CMA101898R1000	1	1.45
	■	Red	380...415		363ERT6W	2CMA101899R1000		
	■	Black	480...500		363ERT7W	2CMA101900R1000		
	■	Blue	200...250		363ERT9W	2CMA101901R1000		
	■	Red	440...460	60	363ERT11W	2CMA101902R1000		
3P+N+E								
5	■	Red	346...415	50 and 60	463ERT6W	2CMA101896R1000	1	1.55
	■	Blue	208...250		463ERT9W	2CMA101897R1000		

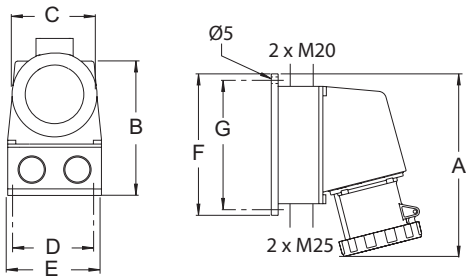

Dimensions (mm)

Type	A	B	C	D	E	F	6
263ERT...W...463ERT...W	255	215	**108**	**129**	**150**	**187**	124

Socket outlet

for panel mounting with unified straight flange, IP67

EASY & SAFE

216ERU6W

16 A. Watertight
Housing in plastic (PA). Cable area 1.5...4 mm²

Terminals/ Poles	Color code	Voltage V	Frequency Hz	Type	Order Code	Pkg qty	Weight pkg (1pce) kg
2P+E							
3	Grey		AC	216ERU1W	2CMA101289R1000	10	0.15
	Yellow	100...130	50 and 60	216ERU4W	2CMA101290R1000		
	Blue	200...250		216ERU6W	2CMA101291R1000		
	Red	380...415		216ERU9W	2CMA101292R1000		
3P+E							
4	Grey		AC	316ERU1W	2CMA101293R1000	10	0.18
	Yellow	100...130	50 and 60	316ERU4W	2CMA101294R1000		
	Black	600...690		316ERU5W	2CMA101295R1000		
	Red	380...415		316ERU6W	2CMA101296R1000		
	Black	480...500		316ERU7W	2CMA101297R1000		
	Blue	200...250		316ERU9W	2CMA101298R1000		
	Red	440...460	60	316ERU11W	2CMA101299R1000		
3P+N+E							
5	Grey		AC	416ERU1W	2CMA101300R1000	10	0.21
	Yellow	100...130	50 and 60	416ERU4W	2CMA101301R1000		
	Red	346...415		416ERU6W	2CMA101302R1000		
	Black	480...500		416ERU7W	2CMA101303R1000		
	Blue	208...250		416ERU9W	2CMA101304R1000		
	Red	440...460	60	416ERU11W	2CMA101305R1000		

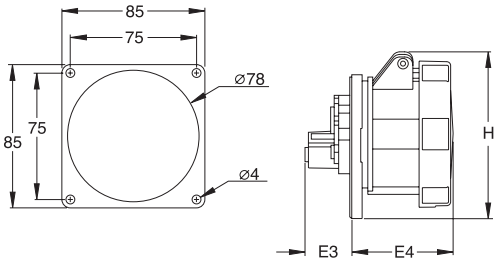

Dimensions (mm)

Type	B	E3	E4
216ERU...W	103	27	60
316ERU...W	98	28	60
416ERU...W	99	28	60

Socket outlet

for panel mounting with unified straight flange, IP67

432ERU6W

32 A. Watertight
Housing in plastic (PA). Cable area 2.5...10 mm²

Terminals/ Poles	Color code	Voltage	Frequency	Type	Order Code	Pkg qty	Weight pkg (1pce)
		V	Hz				kg
2P+E							
3	Grey		AC	232ERU1W	2CMA101306R1000	10	0.22
	Yellow	100...130	50 and 60	232ERU4W	2CMA101307R1000		
	Blue	200...250		232ERU6W	2CMA101308R1000		
	Red	380...415		232ERU9W	2CMA101309R1000		
3P+E							
4	Grey		AC	332ERU1W	2CMA101310R1000	10	0.23
	Red	380/440	50/60	332ERU3W	2CMA101311R1000		
	Yellow	100...130	50 and 60	332ERU4W	2CMA101312R1000		
	Red	380...415		332ERU6W	2CMA101313R1000		
	Black	480...500		332ERU7W	2CMA101314R1000		
	Blue	200...250		332ERU9W	2CMA101315R1000		
	Red	440...460	60	332ERU11W	2CMA101316R1000		
3P+N+E							
5	Grey		AC	432ERU1W	2CMA101317R1000	10	0.23
	Yellow	100...130	50 and 60	432ERU4W	2CMA101318R1000		
	Red	346...415		432ERU6W	2CMA101319R1000		
	Black	480...500		432ERU7W	2CMA101320R1000		
	Blue	208...250		432ERU9W	2CMA101321R1000		
	Red	440...460	60	432ERU11W	2CMA101322R1000		

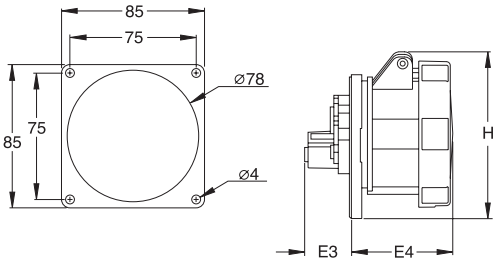

Dimensions (mm)

Type	B	E3	E4
232ERU...W	98	31	70
332ERU...W	98	31	70
432ERU...W	104	32	69

Industrial plugs and sockets
for entertainment applications

Plugs

—
Type EP...B, 16 A...32 A, IP44

Connectors

—
Type EC...B, 16 A...32 A, IP44

Inlets

—
For wall mounting, Type BS...B
16 A...32 A, IP44

Socket outlet

—
For wall mounting, Type RS...B
16 A...32 A, IP44

—
For panel mounting with unified straight flange, Type RU...B
16 A...32 A, IP44

—
For panel mounting with minimized angled flange, Type RAM...B
16 A...32 A, IP44

Black plugs and sockets
for entertainment applications

With extensive experience of designing and producing industrial plugs and sockets, ABB can provide products of high quality, functionality, reliability and safety. Regardless of the situation, safety of people should be of highest priority in electrical installations, always.

ABB´s series of black plugs and sockets which are very well suited for entertainment applications, such as concerts, cinemas, television studios, and open-air events. The black series are perfect for both indoor and outdoor use, they will blend into their dark surroundings.

Pin and sleeve configuration according to IEC standard. Product labels give the information on which voltage range the product is intended for. The black series are at the high quality level that characterizes ABB´s industrial plugs and sockets.

Plug in black color

for entertainment applications, IP44

EASY & SAFE

316EP6B

16 A. Splashproof
Housing in plastic (PA). Cable area 1...2.5 mm²

Terminals/ Poles	Color code	Voltage V	Frequency Hz	Type	Order Code	Pkg qty	Weight pkg (1pce) kg
2P+E							
3	■ Black	200...250	50 and 60	216EP6B	2CMA103579R1000	10	0.11
		380...415		216EP9B	2CMA103598R1000		
3P+E							
4	■ Black	380...415	50 and 60	316EP6B	2CMA103584R1000	10	0.16
		200...250		316EP9B	2CMA103585R1000		
3P+N+E							
5	■ Black	346...415	50 and 60	416EP6B	2CMA103591R1000	10	0.18
		208...250		416EP9B	2CMA103599R1000		

32 A. Splashproof
Housing in plastic (PA). Cable area 2.5...6 mm²

Terminals/ Poles	Color code	Voltage V	Frequency Hz	Type	Order Code	Pkg qty	Weight pkg (1pce) kg
2P+E							
3	■ Black	200...250	50 and 60	232EP6B	2CMA103581R1000	10	0.21
		380...415		232EP9B	2CMA103600R1000		
3P+E							
4	■ Black	380...415	50 and 60	332EP6B	2CMA103588R1000	10	0.23
		200...250		332EP9B	2CMA103589R1000		
3P+N+E							
5	■ Black	346...415	50 and 60	432EP6B	2CMA103593R1000	10	0.24
		208...250		432EP9B	2CMA103601R1000		

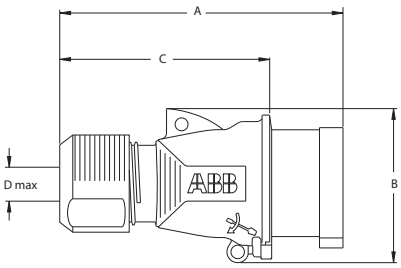

Dimensions (mm)

Type	A	B	C	Dmax
216EP...B	127	62.5	88.5	14
316EP...B	144	74.5	106	17
416EP...B	144	78	106	17
232EP...B	167	82.5	121	22
332EP...B	167	82.5	121	22
432EP...B	167	87.5	121	22

Connector in black color

for entertainment applications, IP44

EASY & SAFE

316EC6B

16 A. Splashproof
Housing in plastic (PA). Cable area 1...2.5 mm²

Terminals/ Poles	Color code	Voltage V	Frequency Hz	Type	Order Code	Pkg qty	Weight pkg (1pce) kg
2P+E							
3	■ Black	200...250	50 and 60	216EC6B	2CMA103578R1000	10	0.11
		380...415		216EC9B	2CMA103594R1000		
3P+E							
4	■ Black	380...415	50 and 60	316EC6B	2CMA103582R1000	10	0.16
		200...250		316EC9B	2CMA103583R1000		
3P+N+E							
5	■ Black	346...415	50 and 60	416EC6B	2CMA103590R1000	10	0.17
		208...250		416EC9B	2CMA103595R1000		

32 A. Splashproof
Housing in plastic (PA). Cable area 2.5...6 mm²

Terminals/ Poles	Color code	Voltage V	Frequency Hz	Type	Order Code	Pkg qty	Weight pkg (1pce) kg
2P+E							
3	■ Black	200...250	50 and 60	232EC6B	2CMA103580R1000	10	0.20
		380...415		232EC9B	2CMA103596R1000		
3P+E							
4	■ Black	380...415	50 and 60	332EC6B	2CMA103586R1000	10	0.22
		200...250		332EC9B	2CMA103587R1000		
3P+N+E							
5	■ Black	346...415	50 and 60	432EC6B	2CMA103592R1000	10	0.23
		208...250		432EC9B	2CMA103597R1000		

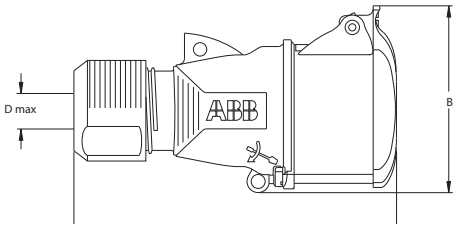

Dimensions (mm)

Type	A	B	Dmax
216EC...B	135.5	74.5	14
316EC...B	155	87	17
416EC...B	156	90.5	17
232EC...B	182	93.5	22
332EC...B	182	93.5	22
432EC...B	182.5	99	22

Inlets for wall mounting in black color

for entertainment applications, IP44

EASY & SAFE

316BS6B

16 A. Splashproof
Housing in plastic (PA). Flexible membrane and metric threaded M20 insert for cop cable entry.
Rear knock-out cable entry. Cable area 1...2.5 mm²

Terminals/ Poles	Color code	Voltage	Frequency	Type	Order Code	Pkg qty	Weight pkg (1pce)
		V	Hz				kg
2P+E							
3	■ Black	200...250	50 and 60	216BS6B	2CMA101027R1000	10	0.15
		380...415		216BS9B	2CMA101058R1000		
3P+E							
4	■ Black	380...415	50 and 60	316BS6B	2CMA101028R1000	10	0.19
		200.250		316BS9B	2CMA101059R1000		
3P+N+E							
5	■ Black	346...415		416BS6B	2CMA101029R1000	10	0.20
		208...250		416BS9B	2CMA101060R1000		

32 A. IP44. Splashproof
Housing in plastic (PA). Flexible membrane and metric threaded M25 insert for cop cable entry.
Rear knock-out cable entry. Cable area 2.5...6 mm²

Terminals/ Poles	Color code	Voltage	Frequency	Type	Order Code	Pkg qty	Weight pkg (1pce)
		V	Hz				kg
2P+E							
3	■ Black	200...250	50 and 60	232BS6B	2CMA101030R1000	10	0.25
		380...415		232BS9B	2CMA101061R1000		
3P+E							
4	■ Black	380...415	50 and 60	332BS6B	2CMA101031R1000	10	0.27
		200...250		332BS9B	2CMA101062R1000		
3P+N+E							
5	■ Black	346...415	50 and 60	432BS6B	2CMA101032R1000	10	0.29
		208...250		432BS9B	2CMA101032R1000		

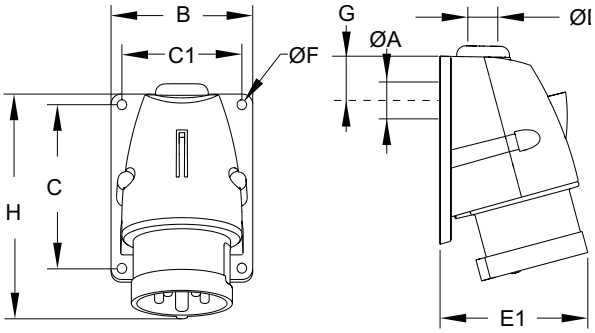

Dimensions (mm)

Type	A	B	C	C1	Dmax	E1	F	G	H
216BS...B	23	66	75	54	18/M20	72	5.5	27	110
316BS...B	23	79	91	67	18/M20	78	5.5	30	124
416BS...B	23	79	91	67	18/M20	81	5.5	30	125
232BS...B	29	85	111	72	22/M25	94	5.5	34	153
332BS...B	29	85	111	72	22/M25	94	5.5	34	153
432BS...B	29	85	111	72	22/M25	96	5.5	34	154

Socket outlet for wall mounting in black color

for entertainment applications, IP44

316RS6B

16 A. Splashproof
Housing in plastic (PA). Flexible membrane and metric threaded M20 insert for cop cable entry.
Rear knock-out cable entry. Cable area 1.5...4 mm²

Terminals/ Poles	Color code	Voltage	Frequency	Type	Order Code	Pkg qty	Weight pkg (1pce)
		V	Hz				kg
2P+E							
3	■ Black	100...130	50 and 60	216RS6B	2CMA101021R1000	10	0.22
		200...250		216RS9B	2CMA101052R1000		
3P+E							
4	■ Black	100...130	50 and 60	316RS6B	2CMA101022R1000	10	0.24
		600...690		316RS9B	2CMA101053R1000		
3P+N+E							
5	■ Black	346...415		416RS6B	2CMA101023R1000	10	0.26
				416RS9B	2CMA101054R1000		

32 A. Splashproof
Housing in plastic (PA). Flexible membrane and metric threaded M25 insert for cop cable entry.
Rear knock-out cable entry. Cable area 2.5...10 mm²

Terminals/ Poles	Color code	Voltage	Frequency	Type	Order Code	Pkg qty	Weight pkg (1pce)
		V	Hz				kg
2P+E							
3	■ Black	100...130	50 and 60	232RS6B	2CMA101024R1000	10	0.30
		200...250		232RS9B	2CMA101055R1000		
3P+E							
4	■ Black	600...690	50 and 60	332RS6B	2CMA101025R1000	10	0.32
		380...415		332RS9B	2CMA101056R1000		
3P+N+E							
5	■ Black	346...415	50 and 60	432RS6B	2CMA101026R1000	10	0.34
				432RS9B	2CMA101057R1000		

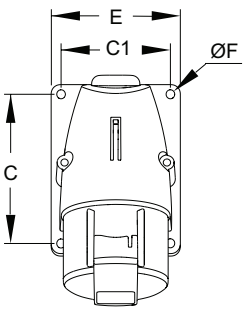

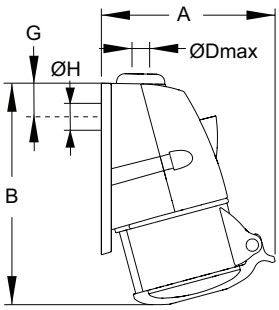

Dimensions (mm)

Type	A	B	C	C1	Dmax	E	F	G	H
216RS...B	91	117	75	54	18/M20	66	5.5	27	23
316RS...B	100	132	91	67	18/M20	79	5.5	30	23
416RS...B	104	134	91	67	18/M20	79	5.5	30	23
232RS...B	118	163	111	72	22/M25	85	5.5	34	29
332RS...B	116	163	111	72	22/M25	85	5.5	34	29
432RS...B	121	164	111	72	22/M25	85	5.5	34	29

Socket outlet for panel mounting in black color

for entertainment applications, IP44

EASY & SAFE

216RU6B

16 A. Splashproof
Housing in plastic (PA). Cable area 1.5...4 mm²

Terminals/ Poles	Color code		Voltage	Frequency	Type	Order Code	Pkg qty	Weight pkg (1pce)
			V	Hz				kg
2P+E								
3	■	Black	200...250	50 and 60	216RU6B	2CMA101639R1000	10	0.15
3P+N+E								
5	■	Black	346...415		416RU6B	2CMA101640R1000	10	0.20

32 A. IP44. Splashproof
Housing in plastic (PA). Cable area 2.5...10 mm²

Terminals/ Poles	Color code		Voltage	Frequency	Type	Order Code	Pkg qty	Weight pkg (1pce)
			V	Hz				kg
3P+N+E								
5	■	Black	346...415	50 and 60	432RU6B	2CMA101641R1000	10	0.24

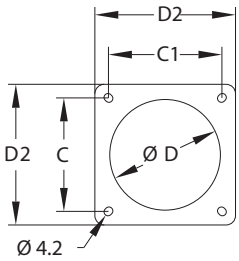

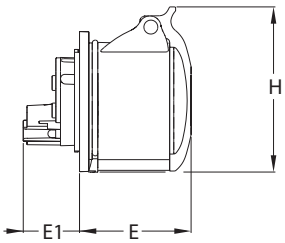

Dimensions (mm)

Type	C	C1	D	D2	E	E1	H
216RU6B	60-61	60-61	49	75	56	29	79
416RU6B	60-61	60-61	59	75	60	31	89
432RU6B	60-61	60-61	66	75	71	34	99

Socket outlet for panel mounting in black color

for entertainment applications, IP44

EASY & SAFE

316RAM6B

16 A. Splashproof
Housing in plastic (PA). Cable area 1.5...4 mm²

Terminals/ Poles	Color code		Voltage V	Frequency Hz	Type	Order Code	Pkg qty	Weight pkg (1pce) kg
2P+E								
3	■	Black	200...250	50 and 60	216RAM6B	2CMA100543R1000	10	0.21
			380...415		216RAM9B	2CMA101048R1000		
3P+E								
4	■	Black	380...415	50 and 60	316RAM6B	2CMA100544R1000	10	0.22
			200...250		316RAM9B	2CMA100873R1000		
3P+N+E								
5	■	Black	346...415	50 and 60	416RAM6B	2CMA100545R1000	10	0.24
			208...250		416RAM9B	2CMA101049R1000		

32 A. Splashproof
Housing in plastic (PA). Cable area 2.5...10 mm²

Terminals/ Poles	Color code		Voltage V	Frequency Hz	Type	Order Code	Pkg qty	Weight pkg (1pce) kg
2P+E								
3	■	Black	200...250	50 and 60	232RAM6B	2CMA100546R1000	10	0.21
			380...415		232RAM9B	2CMA101050R1000		
3P+E								
4	■	Black	380...415	50 and 60	332RAM6B	2CMA100547R1000	10	0.22
			200...250		332RAM9B	2CMA100876R1000		
3P+N+E								
5	■	Black	346...415	50 and 60	432RAM6B	2CMA100548R1000	10	0.24
			208...250		432RAM9B	2CMA101051R1000		

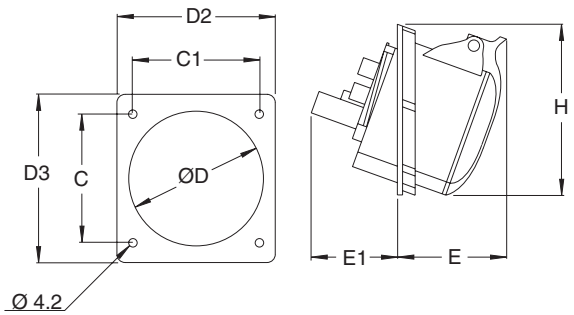

Dimensions (mm)

Type	C	C1	D	D2	D3	E	E1	H
216RAM...B	55	55	63	70	78	53	42	76
316RAM...B	66	66	78	83	89	53	46	85
416RAM...B	66	66	78	83	89	55	48	89
232RAM...B	75	75	87	93	99	61	52	98
332RAM...B	75	75	87	93	99	61	52	98
432RAM...B	75	75	87	93	99	64	52	101

Industrial plugs and sockets
Fast & Safe

Plugs

Type QP..., 16 A...32 A, IP44

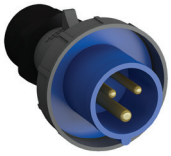

Type QP...W, 16 A...32 A, IP67

Connectors

Type QC..., 16 A...32 A, IP44

Type QC...W, 16 A...32 A, IP67

Inlets

For wall mounting, Type QBS...
16 A...32 A, IP44

For wall mounting, Type QBS...W
16 A...32 A, IP67

For panel mounting with unified straight flange, Type QB...
16 A...32 A, IP44

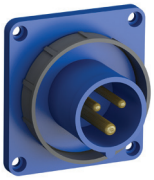

For panel mounting with unified straight flange, Type QB...W
16 A...32 A, IP67

For panel mounting with straight minimized flange, Type QBM...
16 A...32 A, IP44

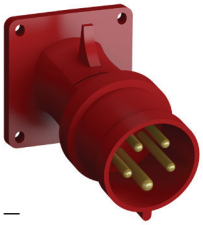

For panel mounting with unified angled flange, Type QBA...
16 A...32 A, IP44

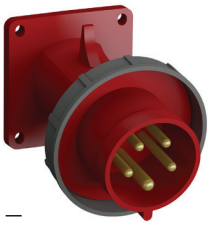

For panel mounting with unified angled flange. Type QBA...W
16 A...32 A, IP67

Socket outlet

For wall mounting, Type QRS...
16 A...32 A, IP44

For wall mounting, Type QRS...W
16A...32 A, IP67

For panel mounting with unified straight flange, Type QR...
16 A...32 A, IP44

For panel mounting with unified straight flange, Type QR...W
16 A...32 A, IP67

For panel mounting with unified angled flange, Type QRA...
16 A...32 A, IP44

For panel mounting with unified angled flange, Type QRA...W
16 A...32 A, IP67

For panel mounting with straight minimized flange, Type QRM...
16 A...32 A, IP44

For panel mounting with straight minimized flange, Type QRM...W
16 A...32 A, IP67

Industrial plugs and sockets
New Fast & Safe

In times with high focus on productivity screwless terminal connectors are growing in popularity. Actually up sixty percent of the installation time can be saved with screwless terminals.

We are now completing our standard offering with Fast & Safe in parallel with Easy & Safe. Fast & Safe is a complete offering of 16-32A plugs and sockets, both as IP44 and IP67. Instead of a screw providing contact pressure at the terminal, Fast & Safe is built on spring technology. More than reducing installation time spring technology has high resistance against vibrations and heat fluctuations.

Plugs

IP44

FAST & SAFE

432QP6

16 A. Splashproof
Housing in plastic (PA). Fast connection. Cable entry with compression gland. Cable area 1...2.5 mm²

Terminals/ Poles	Color code	Voltage	Frequency	Type	Order Code	Pkg qty	Weight pkg (1pce)
		V	Hz				kg
2P+E							
3	Yellow	100...130	50 and 60	216QP4	2CMA102579R1000	10	0.15
	Blue	200...250		216QP6	2CMA102286R1000		
	Red	380...415		216QP9	2CMA102858R1000		
3P+E							
4	Yellow	100...130	50 and 60	316QP4	2CMA102598R1000	10	0.16
	Red	380...415		316QP6	2CMA102305R1000		
	Blue	200...250		316QP9	2CMA102877R1000		
3P+N+E							
5	Yellow	100...130	50 and 60	416QP4	2CMA102617R1000	10	0.18
	Red	346...415		416QP6	2CMA102324R1000		
	Blue	208...250		416QP9	2CMA102896R1000		

32 A. Splashproof
Housing in plastic (PA). Fast connection. Cable entry with compression gland. Cable area 2.5...6 mm²

Terminals/ Poles	Color code	Voltage	Frequency	Type	Order Code	Pkg qty	Weight pkg (1pce)
		V	Hz				kg
2P+E							
3	Yellow	100...130	50 and 60	232QP4	2CMA102638R1000	10	0.18
	Blue	200...250		232QP6	2CMA102345R1000		
	Red	380...415		232QP9	2CMA102917R1000		
3P+E							
4	Yellow	100...130	50 and 60	332QP4	2CMA102690R1000	10	0.20
	Red	380...415		332QP6	2CMA102364R1000		
	Blue	200...250		332QP9	2CMA102936R1000		
3P+N+E							
5	Yellow	100...130	50 and 60	432QP4	2CMA102709R1000	10	0.24
	Red	346...415		432QP6	2CMA102383R1000		
	Blue	208...250		432QP9	2CMA102955R1000		

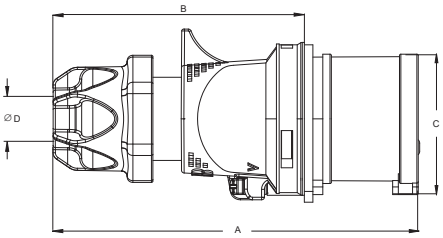

Dimensions (mm)

Type	A	B	C	ØD
216QP...	124	83	47	6-16
316QP...	129	89	53	6-16
416QP...	136	96	61	6-16
232QP...	149	100	63	11-20.5
332QP...	149	100	63	11-20.5
432QP...	156	107	70	11-20.5

Connectors

IP44

216QC6

16 A. Splashproof

Housing in plastic (PA). Fast connection. Cable area 1...2.5 mm²

Terminals/ Poles	Color code	Voltage	Frequency	Type	Order Code	Pkg qty	Weight pkg (1pce)
		V	Hz				kg
2P+E							
3	Yellow	100...130	50 and 60	216QC4	2CMA102580R1000	10	0.18
	Blue	200...250		216QC6	2CMA102287R1000		
	Red	380...415		216QC9	2CMA102859R1000		
3P+E							
4	Yellow	100...130	50 and 60	316QC4	2CMA102599R1000	10	0.21
	Red	380...415		316QC6	2CMA102306R1000		
	Blue	200...250		316QC9	2CMA102878R1000		
3P+N+E							
5	Yellow	100...130	50 and 60	416QC4	2CMA102618R1000	10	0.25
	Red	346...415		416QC6	2CMA102325R1000		
	Blue	208...250		416QC9	2CMA102897R1000		

32 A. Splashproof

Housing in plastic (PA). Fast connection. Cable area 2.5...6 mm²

Terminals/ Poles	Color code	Voltage	Frequency	Type	Order Code	Pkg qty	Weight pkg (1pce)
		V	Hz				kg
2P+E							
3	Yellow	100...130	50 and 60	232QC4	2CMA102639R1000	10	0.25
	Blue	200...250		232QC6	2CMA102346R1000		
	Red	380...415		232QC9	2CMA102918R1000		
3P+E							
4	Yellow	100...130	50 and 60	332QC4	2CMA102691R1000	10	0.26
	Red	380...415		332QC6	2CMA102365R1000		
	Blue	200...250		332QC9	2CMA102937R1000		
3P+N+E							
5	Yellow	100...130	50 and 60	432QC4	2CMA102710R1000	10	0.26
	Red	346...415		432QC6	2CMA102384R1000		
	Blue	208...250		432QC9	2CMA102956R1000		

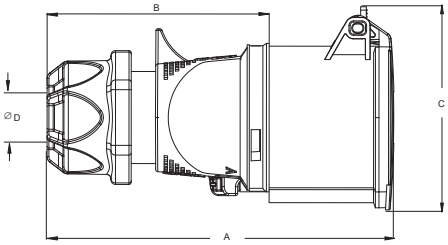

Dimensions (mm)

Type	A	B	C	ØD
216QC...	128	83	72	6-16
316QC...	135	89	78	6-16
416QC...	142	96	87	6-16
232QC...	156	100	91	11-20.5
332QC...	156	100	91	11-20.5
432QC...	162	107	97	11-20.5

Inlets

for wall mounting, IP44

FAST & SAFE

416QBS6

16 A. Splashproof
Housing in plastic (PA). Fast connection. Cable entry with compression gland. Cable area 1...2.5 mm²

Terminals/ Poles	Color code	Voltage	Frequency	Type	Order Code	Pkg qty	Weight pkg (1pce)
		V	Hz				kg
2P+E							
3	Yellow	100...130	50 and 60	216QBS4	2CMA102587R1000	5	0.22
	Yellow	100...130		216QBS4C	2CMA102588R1000		0.25
	Blue	200...250		216QBS6	2CMA102294R1000		0.22
	Blue	200...250		216QBS6C	2CMA102295R1000		0.25
	Red	380...415		216QBS9	2CMA102866R1000		0.22
	Red	380...415		216QBS9C	2CMA102867R1000		0.25
3P+E							
4	Yellow	100...130	50 and 60	316QBS4	2CMA102606R1000	5	0.22
	Yellow	100...130		316QBS4C	2CMA102607R1000		0.25
	Red	380...415		316QBS6	2CMA102313R1000		0.22
	Red	380...415		316QBS6C	2CMA102314R1000		0.25
	Blue	200...250		316QBS9	2CMA102885R1000		0.22
	Blue	200...250		316QBS9C	2CMA102886R1000		0.25
3P+N+E							
5	Yellow	100...130	50 and 60	416QBS4	2CMA102626R1000	5	0.22
	Yellow	100...130		416QBS4C	2CMA102627R1000		0.25
	Red	346...415		416QBS6	2CMA102333R1000		0.22
	Red	346...415		416QBS6C	2CMA102334R1000		0.25
	Blue	208...250		416QBS9	2CMA102905R1000		0.22
	Blue	208...250		416QBS9C	2CMA102906R1000		0.25

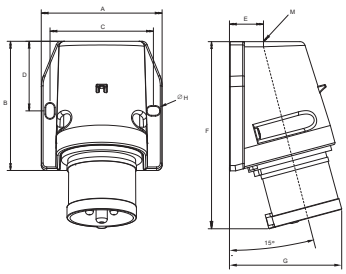

Type .32QBS...

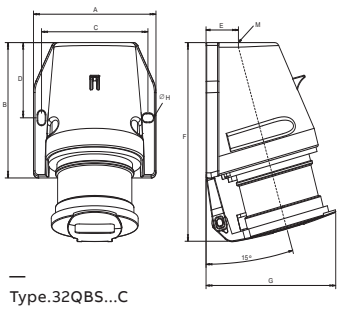

Type.32QBS...C

Dimensions (mm)

Type	A	B	C	D	E	F	G	ØH	M
216QBS...	75	80	64	43	20	116	70	5.3	M20x1.5
216QBS...C	75	80	64	43	20	116.3	70.3	5.3	M20x1.5
316QBS...	88	88	76	48.5	22	123	77	5.3	M25x1.5
316QBS...C	88	88	76	48.5	22	123.3	77.3	5.3	M25x1.5
416QBS...	88	88	76	48.5	22	123	84	5.3	M25x1.5
416QBS...C	88	88	76	48.5	22	123.3	84.3	5.3	M25x1.5

Inlets

for wall mounting, IP44

432QBS6

32 A. Splashproof
Housing in plastic (PA). Fast connection. Cable entry with compression gland. Cable area 2.5...6 mm²

Terminals/ Poles	Color code	Voltage	Frequency	Type	Order Code	Pkg qty	Weight pkg (1pce)
		V	Hz				kg
2P+E							
3	Yellow	100...130	50 and 60	232QBS4	2CMA102646R1000	5	0.22
	Yellow	100...130		232QBS4C	2CMA102647R1000		0.25
	Blue	200...250		232QBS6	2CMA102353R1000		0.22
	Blue	200...250		232QBS6C	2CMA102354R1000		0.25
	Red	380...415		232QBS9	2CMA102925R1000		0.22
	Red	380...415		232QBS9C	2CMA102926R1000		0.25
3P+E							
4	Yellow	100...130	50 and 60	332QBS4	2CMA102698R1000	5	0.29
	Yellow	100...130		332QBS4C	2CMA102699R1000		0.31
	Red	380...415		332QBS6	2CMA102372R1000		0.29
	Red	380...415		332QBS6C	2CMA102373R1000		0.31
	Blue	200...250		332QBS9	2CMA102944R1000		0.29
	Blue	200...250		332QBS9C	2CMA102945R1000		0.31
3P+N+E							
5	Yellow	100...130	50 and 60	432QBS4	2CMA102718R1000	5	0.31
	Yellow	100...130		432QBS4C	2CMA102719R1000		0.35
	Red	346...415		432QBS6	2CMA102392R1000		0.31
	Red	346...415		432QBS6C	2CMA102393R1000		0.35
	Blue	208...250		432QBS9	2CMA102964R1000		0.31
	Blue	208...250		432QBS9C	2CMA102965R1000		0.35

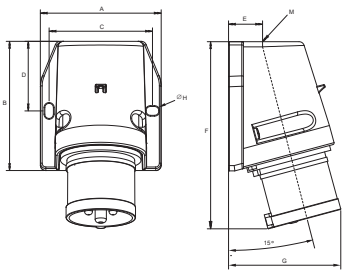

Type .32QBS...

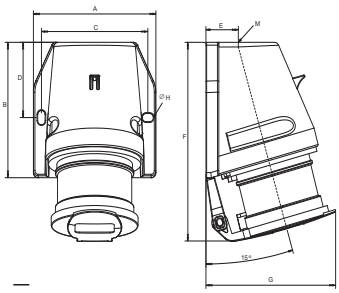

Type.32QBS...C

Dimensions (mm)

Type	A	B	C	D	E	F	G	ØH	M
232QBS...	88	88	76	48.5	22	132	87	5.3	M25x1.5
232QBS...C	88	88	76	48.5	22.3	132.3	87	5.3	M25x1.5
332QBS...	88	88	76	48.5	22	132	87	5.3	M25x1.5
332QBS...C	88	88	76	48.5	22.3	132.3	87	5.3	M25x1.5
432QBS...	96	102	84	56	26	146	94	5.3	M32x1.5
432QBS...C	96	102	84	56	26.3	146.3	94	5.3	M32x1.5

Inlets

for panel mounting with unified straight flange, IP44

FAST & SAFE

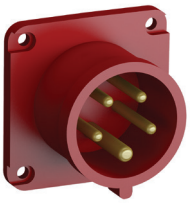

432QB6

16 A. Splashproof
Housing in plastic (PA). Fast connection. Cable area 1...2.5 mm²

Terminals/ Poles	Color code	Voltage	Frequency	Type	Order Code	Pkg qty	Weight pkg (1pce)
		V	Hz				kg
3P+N+E							
5	Yellow	100...130	50 and 60	416QB4	2CMA102624R1000	10	0.13
	Red	346...415		416QB6	2CMA102331R1000		
	Blue	208...250		416QB9	2CMA102903R1000		

32 A. Splashproof
Housing in plastic (PA). Fast connection.Cable area 2.5...6 mm²

Terminals/ Poles	Color code	Voltage	Frequency	Type	Order Code	Pkg qty	Weight pkg (1pce)
		V	Hz				kg
3P+N+E							
5	Yellow	100...130	50 and 60	432QB4	2CMA102716R1000	10	0.17
	Red	346...415		432QB6	2CMA102390R1000		
	Blue	208...250		432QB9	2CMA102962R1000		

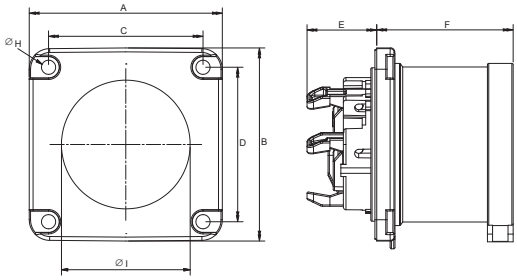

Dimensions (mm)

Type	A	B	C	D	E	F	ØH	ØI
416QB...	75	75	60	60	23	44	5.5	56
432QB...	75	75	60	60	27	53	5.5	60

Inlets

for panel mounting with unified angled flange, IP44

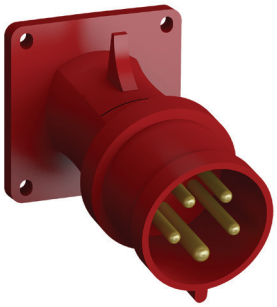

432QBA6

16 A. Splashproof
Housing in plastic (PA). Cable area 1...2.5 mm²

Terminals/ Poles	Color code	Voltage V	Frequency Hz	Type	Order Code	Pkg qty	Weight pkg (1pce) kg
2P+E							
3	Yellow	100...130	50 and 60	216QBA4	2CMA102586R1000	10	0.15
	Blue	200...250		216QBA6	2CMA102293R1000		
	Red	380...415		216QBA9	2CMA102865R1000		
3P+E							
4	Yellow	100...130	50 and 60	316QBA4	2CMA102605R1000	10	0.18
	Red	380...415		316QBA6	2CMA102312R1000		
	Blue	200...250		316QBA9	2CMA102884R1000		
3P+N+E							
5	Yellow	100...130	50 and 60	416QBA4	2CMA102625R1000	10	0.22
	Red	346...415		416QBA6	2CMA102332R1000		
	Blue	208...250		416QBA9	2CMA102904R1000		

32 A. Splashproof
Housing in plastic (PA). Cable area 2.5...6 mm²

Terminals/ Poles	Color code	Voltage V	Frequency Hz	Type	Order Code	Pkg qty	Weight pkg (1pce) kg
2P+E							
3	Yellow	100...130	50 and 60	232QBA4	2CMA102645R1000	10	0.17
	Blue	200...250		232QBA6	2CMA102352R1000		
	Red	380...415		232QBA9	2CMA102924R1000		
3P+E							
4	Yellow	100...130	50 and 60	332QBA4	2CMA102697R1000	10	0.20
	Red	380...415		332QBA6	2CMA102371R1000		
	Blue	200...250		332QBA9	2CMA102943R1000		
3P+N+E							
5	Yellow	100...130	50 and 60	432QBA4	2CMA102717R1000	10	0.48
	Red	346...415		432QBA6	2CMA102391R1000		
	Blue	208...250		432QBA9	2CMA102963R1000		

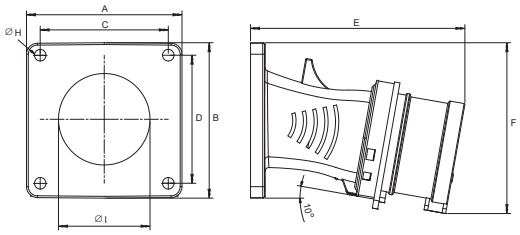

Dimensions (mm)

Type	A	B	C	D	E	F	ØH	ØI
216QBA...	85	85	70	70	106	85	6.3	50
316QBA...	85	85	70	70	112	88	6.3	50
416QBA...	85	85	70	70	117	94	6.3	50
232QBA...	85	85	70	70	126	96	6.3	50
332QBA...	85	85	70	70	126	96	6.3	50
432QBA...	85	85	70	70	133	102	6.3	50

Inlets

for panel mounting with straight minimized flange, IP44

FAST & SAFE

216QBM6

16 A. Splashproof
Housing in plastic (PA). Cable area 1...2.5 mm²

Terminals/ Poles	Color code	Voltage	Frequency	Type	Order Code	Pkg qty	Weight pkg (1pce)
		V	Hz				kg
2P+E							
3	Yellow	100...130	50 and 60	216QBM4	2CMA102585R1000	10	0.10
	Blue	200...250		216QBM6	2CMA102292R1000		
	Red	380...415		216QBM9	2CMA102864R1000		
3P+E							
4	Yellow	100...130	50 and 60	316QBM4	2CMA102604R1000	10	0.13
	Red	380...415		316QBM6	2CMA102311R1000		
	Blue	200...250		316QBM9	2CMA102883R1000		
3P+N+E							
5	Yellow	100...130	50 and 60	416QBM4	2CMA102623R1000	10	0.13
	Red	346...415		416QBM6	2CMA102330R1000		
	Blue	208...250		416QBM9	2CMA102902R1000		

32 A. Splashproof
Housing in plastic (PA). Cable area 2.5...6 mm²

Terminals/ Poles	Color code	Voltage	Frequency	Type	Order Code	Pkg qty	Weight pkg (1pce)
		V	Hz				kg
2P+E							
3	Yellow	100...130	50 and 60	232QBM4	2CMA102644R1000	10	0.11
	Blue	200...250		232QBM6	2CMA102351R1000		
	Red	380...415		232QBM6	2CMA102923R1000		
3P+E							
4	Yellow	100...130	50 and 60	332QBM4	2CMA102696R1000	10	0.15
	Red	380...415		332QBM6	2CMA102370R1000		
	Blue	200...250		332QBM9	2CMA102942R1000		
3P+N+E							
5	Yellow	100...130	50 and 60	432QBM4	2CMA102715R1000	10	0.17
	Red	346...415		432QBM6	2CMA102389R1000		
	Blue	208...250		432QBM9	2CMA102961R1000		

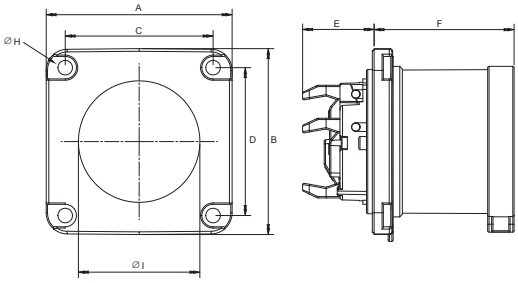

Dimensions (mm)

Type	A	B	C	D	E	F	ØH	ØI
216QBM...	70	70	56	56	23	44	5.5	44
316QBM...	70	70	56	56	23	44	5.5	52
416QBM...	70	70	56	56	23	44	5.5	56
232QBM...	70	70	56	56	27	53	5.5	56
332QBM...	70	70	56	56	27	53	5.5	56
432QBM...	70	70	56	56	27	53	5.5	60

Socket outlet

for wall mounting, IP44

432QRS6

16 A. Splashproof
Housing in plastic (PA). Fast connection. Cable entry with compression gland. Cable area 1.5...4 mm²

Terminals/ Poles	Color code	Voltage	Frequency	Type	Order Code	Pkg qty	Weight pkg (1pce)
		V	Hz				kg
2P+E							
3	Yellow	100...130	50 and 60	216QRS4	2CMA102584R1000	10	0.25
	Blue	200...250		216QRS6	2CMA102291R1000		
	Red	380...415		216QRS9	2CMA102863R1000		
3P+E							
4	Yellow	100...130	50 and 60	316QRS4	2CMA102603R1000	10	0.27
	Red	380...415		316QRS6	2CMA102310R1000		
	Blue	200...250		316QRS9	2CMA102882R1000		
3P+N+E							
5	Yellow	100...130	50 and 60	416QRS4	2CMA102622R1000	10	0.29
	Red	346...415		416QRS6	2CMA102329R1000		
	Blue	208...250		416QRS9	2CMA102901R1000		

32 A. Splashproof
Housing in plastic (PA). Fast connection. Cable entry with compression gland. Cable area 2.5...10 mm²

Terminals/ Poles	Color code	Voltage	Frequency	Type	Order Code	Pkg qty	Weight pkg (1pce)
		V	Hz				kg
2P+E							
3	Yellow	100...130	50 and 60	232QRS4	2CMA102643R1000	10	0.30
	Blue	200...250		232QRS6	2CMA102350R1000		
	Red	380...415		232QRS9	2CMA102922R1000		
3P+E							
4	Yellow	100...130	50 and 60	332QRS4	2CMA102695R1000	10	0.33
	Red	380...415		332QRS6	2CMA102369R1000		
	Blue	200...250		332QRS9	2CMA102941R1000		
3P+N+E							
5	Yellow	100...130	50 and 60	432QRS4	2CMA102714R1000	10	0.36
	Red	346...415		432QRS6	2CMA102388R1000		
	Blue	208...250		432QRS9	2CMA102960R1000		

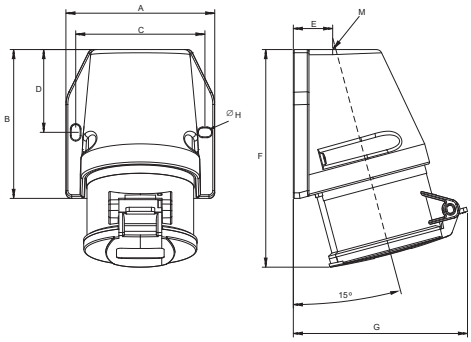

Dimensions (mm)

Type	A	B	C	D	E	F	G	ØH	M
216QRS...	75	80	64	43	20	121	88	5.3	M20x1.5
316QRS...	88	88	76	48.5	22	128	96	5.3	M25x1.5
416QRS...	88	88	76	48.5	22	128	103	5.3	M25x1.5
232QRS...	88	88	76	48.5	22	139	106	5.3	M25x1.5
332QRS...	88	88	76	48.5	22	139	106	5.3	M25x1.5
432QRS...	88	102	84	56	26	152	113	5.3	M32x1.5

Socket outlet

for panel mounting with unified straight flange, IP44

FAST & SAFE

216QR6

16 A. Splashproof
Housing in plastic (PA). Cable area 1.5...4 mm²

Terminals/ Poles	Color code	Voltage V	Frequency Hz	Type	Order Code	Pkg qty	Weight pkg (1pce) kg
2P+E							
3	Yellow	100...130	50 and 60	216QR4	2CMA102582R1000	10	0.11
	Blue	200...250		216QR6	2CMA102289R1000		
	Red	380...415		216QR9	2CMA102861R1000		
3P+E							
4	Yellow	100...130	50 and 60	316QR4	2CMA102601R1000	10	0.13
	Red	380...415		316QR6	2CMA102308R1000		
	Blue	200...250		316QR9	2CMA102880R1000		
3P+N+E							
5	Yellow	100...130	50 and 60	416QR4	2CMA102620R1000	10	0.15
	Red	346...415		416QR6	2CMA102327R1000		
	Blue	208...250		416QR9	2CMA102899R1000		

32 A. Splashproof
Housing in plastic (PA). Cable area 2.5...10 mm²

Terminals/ Poles	Color code	Voltage V	Frequency Hz	Type	Order Code	Pkg qty	Weight pkg (1pce) kg
2P+E							
3	Yellow	100...130	50 and 60	232QR4	2CMA102641R1000	10	0.15
	Blue	200...250		232QR6	2CMA102348R1000		
	Red	380...415		232QR9	2CMA102920R1000		
3P+E							
4	Yellow	100...130	50 and 60	332QR4	2CMA102693R1000	10	0.16
	Red	380...415		332QR6	2CMA102367R1000		
	Blue	200...250		332QR9	2CMA102939R1000		
3P+N+E							
5	Yellow	100...130	50 and 60	432QR4	2CMA102712R1000	10	0.18
	Red	346...415		432QR6	2CMA102386R1000		
	Blue	208...250		432QR9	2CMA102958R1000		

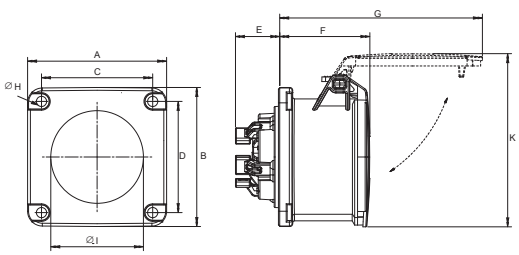

Dimensions (mm)

Type	A	B	C	D	E	F	G	ØH	ØI	K
216QR...	75	75	60	60	24	49	95	5.5	44	86
316QR...	75	75	60	60	24	49	102	5.5	49	90
416QR...	75	75	60	60	24	49	110	5.5	56	94
232QR...	75	75	60	60	30	58	122	5.5	56	98
332QR...	75	75	60	60	30	58	122	5.5	56	98
432QR...	75	75	60	60	30	58	128	5.5	60	105

Socket outlet

for panel mounting with unified angled flange, IP44

432QRA6

16 A. Splashproof
Housing in plastic (PA). Cable area 1.5...4 mm²

Terminals/ Poles	Color code	Voltage	Frequency	Type	Order Code	Pkg qty	Weight pkg (1pce)
		V	Hz				kg
2P+E							
3	Yellow	100...130	50 and 60	216QRA4	2CMA102583R1000	10	0.15
	Blue	200...250		216QRA6	2CMA102290R1000		
	Red	380...415		216QRA9	2CMA102862R1000		
3P+E							
4	Yellow	100...130	50 and 60	316QRA4	2CMA102602R1000	10	0.16
	Red	380...415		316QRA6	2CMA102309R1000		
	Blue	200...250		316QRA9	2CMA102881R1000		
3P+N+E							
5	Yellow	100...130	50 and 60	416QRA4	2CMA102621R1000	10	0.16
	Red	346...415		416QRA6	2CMA102328R1000		
	Blue	208...250		416QRA9	2CMA102900R1000		

32 A. Splashproof
Housing in plastic (PA). Cable area 2.5...10 mm²

Terminals/ Poles	Color code	Voltage	Frequency	Type	Order Code	Pkg qty	Weight pkg (1pce)
		V	Hz				kg
2P+E							
3	Yellow	100...130	50 and 60	232QRA4	2CMA102642R1000	10	0.20
	Blue	200...250		232QRA6	2CMA102349R1000		
	Red	380...415		232QRA9	2CMA102921R1000		
3P+E							
4	Yellow	100...130	50 and 60	332QRA4	2CMA102694R1000	10	0.22
	Red	380...415		332QRA6	2CMA102368R1000		
	Blue	200...250		332QRA9	2CMA102940R1000		
3P+N+E							
5	Yellow	100...130	50 and 60	432QRA4	2CMA102713R1000	10	0.40
	Red	346...415		432QRA6	2CMA102387R1000		
	Blue	208...250		432QRA9	2CMA102959R1000		

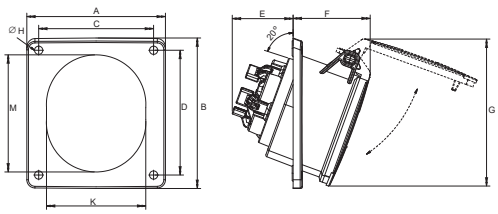

Dimensions (mm)

Type	A	B	C	D	E	F	G	ØH	K	M
216QRA...	83	90	70	76	37	43	90	5	52	65
316QRA...	83	90	70	76	37	45	90	5	56	68
416QRA...	83	90	70	76	37	47	90	5	62	72
232QRA...	83	90	70	76	43	54	98	5	66	76
332QRA...	83	90	70	76	43	54	98	5	66	76
432QRA...	83	90	70	76	49	51	100	5	72	82

Socket outlet

for panel mounting with straight minimized flange, IP44

FAST & SAFE

216QRM6

16 A. Splashproof
Housing in plastic (PA). Fast connection. Cable area 1.5...4 mm²

Terminals/ Poles	Color code	Voltage V	Frequency Hz	Type	Order Code	Pkg qty	Weight pkg (1pce) kg
2P+E							
3	Yellow	100...130	50 and 60	216QRM4	2CMA102581R1000	10	0.11
	Blue	200...250		216QRM6	2CMA102288R1000		
	Red	380...415		216QRM9	2CMA102860R1000		
3P+E							
4	Yellow	100...130	50 and 60	316QRM4	2CMA102600R1000	10	0.13
	Red	380...415		316QRM6	2CMA102307R1000		
	Blue	200...250		316QRM9	2CMA102879R1000		
3P+N+E							
5	Yellow	100...130	50 and 60	416QRM4	2CMA102619R1000	10	0.15
	Red	346...415		416QRM6	2CMA102326R1000		
	Blue	208...250		416QRM9	2CMA102898R1000		

32 A. Splashproof
Housing in plastic (PA). Fast connection.Cable area 2.5...10 mm²

Terminals/ Poles	Color code	Voltage V	Frequency Hz	Type	Order Code	Pkg qty	Weight pkg (1pce) kg
2P+E							
3	Yellow	100...130	50 and 60	232QRM4	2CMA102640R1000	10	0.14
	Blue	200...250		232QRM6	2CMA102347R1000		
	Red	380...415		232QRM9	2CMA102919R1000		
3P+E							
4	Yellow	100...130	50 and 60	332QRM4	2CMA102692R1000	10	0.15
	Red	380...415		332QRM6	2CMA102366R1000		
	Blue	200...250		332QRM9	2CMA102938R1000		
3P+N+E							
5	Yellow	100...130	50 and 60	432QRM4	2CMA102711R1000	10	0.18
	Red	346...415		432QRM6	2CMA102385R1000		
	Blue	208...250		432QRM9	2CMA102957R1000		

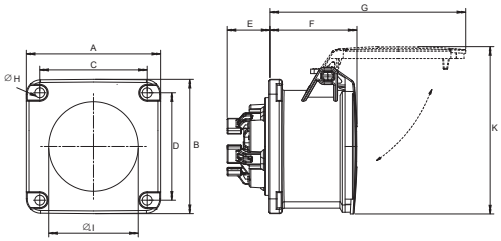

Dimensions (mm)

Type	A	B	C	D	E	F	G	ØH	ØI	K
216QRM...	70	70	56	56	24	49	95	5.5	44	86
316QRM...	70	70	56	56	24	49	102	5.5	49	90
416QRM...	70	70	56	56	24	49	110	5.5	56	94
232QRM...	70	70	56	56	30	58	122	5.5	56	98
332QRM...	70	70	56	56	30	58	122	5.5	56	98
432QRM...	70	70	56	56	30	58	128	5.5	60	104

Plugs

IP67

432QP6W

16 A. Watertight
Housing in plastic (PA). Fast connection. Cable entry with compression gland. Cable area 1...2.5 mm²

Terminals/ Poles	Color code	Voltage	Frequency	Type	Order Code	Pkg qty	Weight pkg (1pce)
		V	Hz				kg
2P+E							
3	Yellow	100...130	50 and 60	216QP4W	2CMA102589R1000	10	0.17
	Blue	200...250		216QP6W	2CMA102296R1000		
	Red	380...415		216QP9W	2CMA102868R1000		
3P+E							
4	Yellow	100...130	50 and 60	316QP4W	2CMA102608R1000	10	0.19
	Red	380...415		316QP6W	2CMA102315R1000		
	Blue	200...250		316QP9W	2CMA102887R1000		
3P+N+E							
5	Yellow	100...130	50 and 60	416QP4W	2CMA102628R1000	10	0.23
	Red	346...415		416QP6W	2CMA102335R1000		
	Blue	208...250		416QP9W	2CMA102907R1000		

32 A. Watertight
Housing in plastic (PA). Fast connection. Cable entry with compression gland. Cable area 2.5...6 mm²

Terminals/ Poles	Color code	Voltage	Frequency	Type	Order Code	Pkg qty	Weight pkg (1pce)
		V	Hz				kg
2P+E							
3	Yellow	100...130	50 and 60	232QP4W	2CMA102648R1000	10	0.23
	Blue	200...250		232QP6W	2CMA102355R1000		
	Red	380...415		232QP9W	2CMA102927R1000		
3P+E							
4	Yellow	100...130	50 and 60	332QP4W	2CMA102700R1000	10	0.25
	Red	380...415		332QP6W	2CMA102374R1000		
	Blue	200...250		332QP9W	2CMA102946R1000		
3P+N+E							
5	Yellow	100...130	50 and 60	432QP4W	2CMA102720R1000	10	0.29
	Red	346...415		432QP6W	2CMA102394R1000		
	Blue	208...250		432QP9W	2CMA102966R1000		

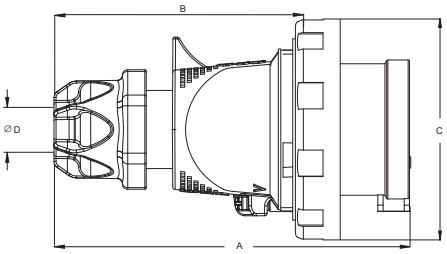

Dimensions (mm)

Type	A	B	C	ØD
216QP...	124	83	72	6-16
316QP...	129	89	81	6-16
416QP...	136	96	89	6-16
232QP...	149	100	93	11-20.5
332QP...	149	100	93	11-20.5
432QP...	156	107	102	11-20.5

Connectors

IP67

FAST & SAFE

432QC6W

16 A. Watertight

Housing in plastic (PA). Fast connection. Cable entry with compression gland. Cable area 1...2.5 mm²

Terminals/ Poles	Color code	Voltage	Frequency	Type	Order Code	Pkg qty	Weight pkg (1pce)
		V	Hz				kg
2P+E							
3	Yellow	100...130	50 and 60	216QC4W	2CMA102590R1000	10	0.20
	Blue	200...250		216QC6W	2CMA102297R1000		
	Red	380...415		216QC9W	2CMA102869R1000		
3P+E							
4	Yellow	100...130	50 and 60	316QC4W	2CMA102609R1000	10	0.25
	Red	380...415		316QC6W	2CMA102316R1000		
	Blue	200...250		316QC9W	2CMA102888R1000		
3P+N+E							
5	Yellow	100...130	50 and 60	416QC4W	2CMA102629R1000	10	0.27
	Red	346...415		416QC6W	2CMA102336R1000		
	Blue	208...250		416QC9W	2CMA102908R1000		

32 A. Watertight

Housing in plastic (PA). Fast connection. Cable entry with compression gland. Cable area 2.5...6 mm²

Terminals/ Poles	Color code	Voltage	Frequency	Type	Order Code	Pkg qty	Weight pkg (1pce)
		V	Hz				kg
2P+E							
3	Yellow	100...130	50 and 60	232QC4W	2CMA102649R1000	10	0.29
	Blue	200...250		232QC6W	2CMA102356R1000		
	Red	380...415		232QC9W	2CMA102928R1000		
3P+E							
4	Yellow	100...130	50 and 60	332QC4W	2CMA102701R1000	10	0.31
	Red	380...415		332QC6W	2CMA102375R1000		
	Blue	200...250		332QC9W	2CMA102947R1000		
3P+N+E							
5	Yellow	100...130	50 and 60	432QC4W	2CMA102721R1000	10	0.32
	Red	346...415		432QC6W	2CMA102395R1000		
	Blue	208...250		432QC9W	2CMA102967R1000		

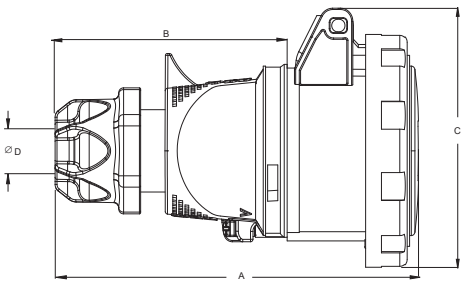

Dimensions (mm)

Type	A	B	C	ØD
216QC...W	137	83	82	6-16
316QC...W	143	89	89	6-16
416QC...W	150	96	99	6-16
232QC...W	166	100	102	11-20.5
332QC...W	166	100	102	11-20.5
432QC...W	173	107	109	11-20.5

Inlets

for wall mounting, IP67

216QBS6W

16 A. Watertight

Housing in plastic (PA). Fast connection. Cable entry with compression gland. Cable area 1...2.5 mm²

Terminals/ Poles	Color code	Voltage	Frequency	Type	Order Code	Pkg qty	Weight pkg (1pce)
		V	Hz				kg
2P+E							
3	Yellow	100...130	50 and 60	216QBS4W	2CMA102597R1000	10	0.23
	Blue	200...250		216QBS6W	2CMA102304R1000		
	Red	380...415		216QBS9W	2CMA102876R1000		
3P+E							
4	Yellow	100...130	50 and 60	316QBS4W	2CMA102616R1000	10	0.29
	Red	380...415		316QBS6W	2CMA102323R1000		
	Blue	200...250		316QBS9W	2CMA102895R1000		
3P+N+E							
5	Yellow	100...130	50 and 60	416QBS4W	2CMA102637R1000	10	0.30
	Red	346...415		416QBS6W	2CMA102344R1000		
	Blue	208...250		416QBS9W	2CMA102916R1000		

32 A. Watertight

Housing in plastic (PA). Fast connnection. Cable entry with compression gland. Cable area 2.5...6 mm²

Terminals/ Poles	Color code	Voltage	Frequency	Type	Order Code	Pkg qty	Weight pkg (1pce)
		V	Hz				kg
2P+E							
3	Yellow	100...130	50 and 60	232QBS4W	2CMA102689R1000	10	0.24
	Blue	200...250		232QBS6W	2CMA102363R1000		
	Red	380...415		232QBS9W	2CMA102935R1000		
3P+E							
4	Yellow	100...130	50 and 60	332QBS4W	2CMA102708R1000	10	0.26
	Red	380...415		332QBS6W	2CMA102382R1000		
	Blue	200...250		332QBS9W	2CMA102954R1000		
3P+N+E							
5	Yellow	100...130	50 and 60	432QBS4W	2CMA102727R1000	10	0.37
	Red	346...415		432QBS6W	2CMA102401R1000		
	Blue	208...250		432QBS9W	2CMA102973R1000		

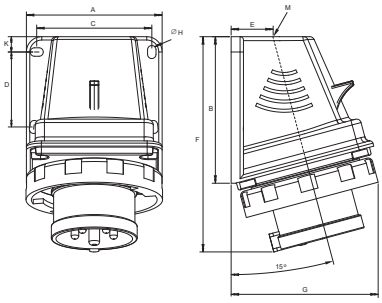

Dimensions (mm)

Type	A	B	C	D	E	F	G	K	ØH	M
216QBS...W	88.5	95.5	75	49	23.5	138	93	10	5.5	M25x1.5
316QBS...W	88.5	95.5	75	49	23.5	140	93	10	5.5	M25x1.5
416QBS...W	88.5	95.5	75	49	23.5	140	96	10	5.5	M25x1.5
232QBS...W	88.5	95.5	75	49	23.5	149	99	10	5.5	M25x1.5
332QBS...W	88.5	95.5	75	49	23.5	149	99	10	5.5	M25x1.5
432QBS...W	88.5	95.5	75	49	23.5	151	103	10	5.5	M25x1.5

Inlets

for panel mounting with unified straight flange, IP67

FAST & SAFE

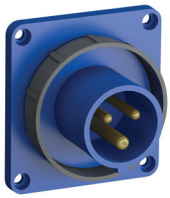

216QB6W

16 A. Watertight
Housing in plastic (PA). Cable area 1...2.5 mm²

Terminals/ Poles	Color code	Voltage	Frequency	Type	Order Code	Pkg qty	Weight pkg (1pce)
		V	Hz				kg
2P+E							
3	Yellow	100...130	50 and 60	216QB4W	2CMA102595R1000	10	0.12
	Blue	200...250		216QB6W	2CMA102302R1000		
	Red	380...415		216QB9W	2CMA102874R1000		
3P+E							
4	Yellow	100...130	50 and 60	316QB4W	2CMA102614R1000	10	0.14
	Red	380...415		316QB6W	2CMA102321R1000		
	Blue	200...250		316QB9W	2CMA102893R1000		
3P+N+E							
5	Yellow	100...130	50 and 60	416QB4W	2CMA102635R1000	10	0.18
	Red	346...415		416QB6W	2CMA102342R1000		
	Blue	208...250		416QB9W	2CMA102914R1000		

32 A. Watertight
Housing in plastic (PA). Cable area 2.5...6 mm²

Terminals/ Poles	Color code	Voltage	Frequency	Type	Order Code	Pkg qty	Weight pkg (1pce)
		V	Hz				kg
2P+E							
3	Yellow	100...130	50 and 60	232QB4W	2CMA102687R1000	10	0.20
	Blue	200...250		232QB6W	2CMA102361R1000		
	Red	380...415		232QB9W	2CMA102933R1000		
3P+E							
4	Yellow	100...130	50 and 60	332QB4W	2CMA102706R1000	10	0.22
	Red	380...415		332QB6W	2CMA102380R1000		
	Blue	200...250		332QB9W	2CMA102952R1000		
3P+N+E							
5	Yellow	100...130	50 and 60	432QB4W	2CMA102725R1000	10	0.24
	Red	346...415		432QB6W	2CMA102399R1000		
	Blue	208...250		432QB9W	2CMA102971R1000		

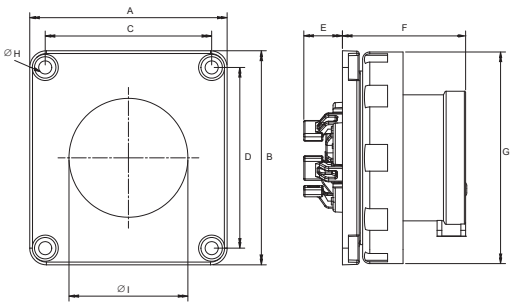

Dimensions (mm)

Type	A	B	C	D	E	F	G	ØH	ØI
216QB...W	83	90	70	76	17	52	90	5.5	65
316QB...W	83	90	70	76	17	52	90	5.5	65
416QB...W	83	90	70	76	17	52	90	5.5	65
232QB...W	83	90	70	76	21	61	93	5.5	65
332QB...W	83	90	70	76	21	61	93	5.5	65
432QB...W	83	90	70	76	21	61	102	5.5	65

Inlets

for panel mounting with unified angled flange, IP67

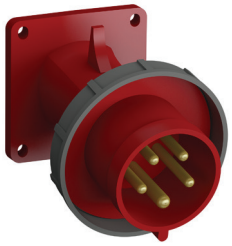

432QBA6W

16 A. Watertight
Housing in plastic (PA). Cable area 1...2.5 mm²

Terminals/ Poles	Color code	Voltage V	Frequency Hz	Type	Order Code	Pkg qty	Weight pkg (1pce) kg
2P+E							
3	Yellow	100...130	50 and 60	216QBA4W	2CMA102596R1000	10	0.12
	Blue	200...250		216QBA6W	2CMA102303R1000		
	Red	380...415		216QBA9W	2CMA102875R1000		
3P+E							
4	Yellow	100...130	50 and 60	316QBA4W	2CMA102615R1000	10	0.22
	Red	380...415		316QBA6W	2CMA102322R1000		
	Blue	200...250		316QBA9W	2CMA102894R1000		
3P+N+E							
5	Yellow	100...130	50 and 60	416QBA4W	2CMA102636R1000	10	0.24
	Red	346...415		416QBA6W	2CMA102343R1000		
	Blue	208...250		416QBA9W	2CMA102915R1000		

32 A. Watertight
Housing in plastic (PA). Cable area 2.5...6 mm²

Terminals/ Poles	Color code	Voltage V	Frequency Hz	Type	Order Code	Pkg qty	Weight pkg (1pce) kg
2P+E							
3	Yellow	100...130	50 and 60	232QBA4W	2CMA102688R1000	10	0.18
	Blue	200...250		232QBA6W	2CMA102362R1000		
	Red	380...415		232QBA9W	2CMA102934R1000		
3P+E							
4	Yellow	100...130	50 and 60	332QBA4W	2CMA102707R1000	10	0.20
	Red	380...415		332QBA6W	2CMA102381R1000		
	Blue	200...250		332QBA9W	2CMA102953R1000		
3P+N+E							
5	Yellow	100...130	50 and 60	432QBA4W	2CMA102726R1000	10	0.25
	Red	346...415		432QBA6W	2CMA102400R1000		
	Blue	208...250		432QBA9W	2CMA102972R1000		

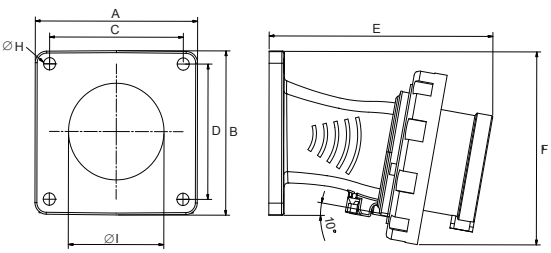

Dimensions (mm)

Type	A	B	C	D	E	F	G	ØH	K	M
216QBA...W	83	90	70	76	37	50	103	5	52	65
316QBA...W	83	90	70	76	37	52	109	5	56	68
416QBA...W	83	90	70	76	37	55	119	5	62	72
232QBA...W	83	90	70	76	43	62	125	5	66	76
332QBA...W	83	90	70	76	43	62	125	5	66	76
432QBA...W	83	90	70	76	49	59	133	5	72	82

Socket outlet

for wall mounting, IP67

FAST & SAFE

232QRS6W

16 A. Watertight
Housing in plastic (PA). Fast connection. Cable entry with compression gland. Cable area 1.5...4 mm²

Terminals/ Poles	Color code	Voltage	Frequency	Type	Order Code	Pkg qty	Weight pkg (1pce)
		V	Hz				kg
2P+E							
3	Yellow	100...130	50 and 60	216QRS4W	2CMA102593R1000	5	0.25
	Blue	200...250		216QRS6W	2CMA102300R1000		
	Red	380...415		216QRS9W	2CMA102872R1000		
3P+E							
4	Yellow	100...130	50 and 60	316QRS4W	2CMA102612R1000	5	0.28
	Red	380...415		316QRS6W	2CMA102319R1000		
	Blue	200...250		316QRS9W	2CMA102891R1000		
3P+N+E							
5	Yellow	100...130	50 and 60	416QRS4W	2CMA102633R1000	10	0.36
	Red	346...415		416QRS6W	2CMA102340T1000		
	Blue	208...250		416QRS9W	2CMA102912R1000		

32 A. Watertight
Housing in plastic (PA). Fast connection. Cable entry with compression gland. Cable area 2.5...10 mm²

Terminals/ Poles	Color code	Voltage	Frequency	Type	Order Code	Pkg qty	Weight pkg (1pce)
		V	Hz				kg
2P+E							
3	Yellow	100...130	50 and 60	232QRS4W	2CMA102652R1000	5	0.38
	Blue	200...250		232QRS6W	2CMA102359R1000		
	Red	380...415		232QRS9W	2CMA102931R1000		
3P+E							
4	Yellow	100...130	50 and 60	332QRS4W	2CMA102704R1000	5	0.39
	Red	380...415		332QRS6W	2CMA102378R1000		
	Blue	200...250		332QRS9W	2CMA102950R1000		
3P+N+E							
5	Yellow	100...130	50 and 60	432QRS4W	2CMA102724R1000	5	0.42
	Red	346...415		432QRS6W	2CMA102398R1000		
	Blue	208...250		432QRS9W	2CMA102970R1000		

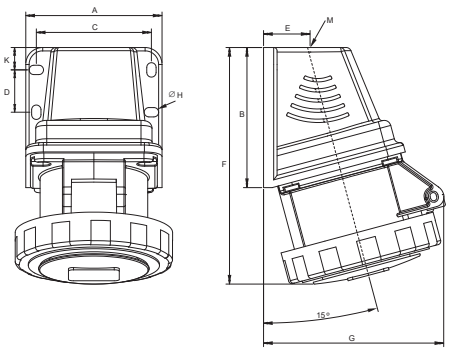

Dimensions (mm)

Type	A	B	C	D	E	F	G	K	ØH	M
216QRS...W	80.5	83	68	25	23.5	130	97	13.5	5.5	M25x1.5
316QRS...W	80.5	83	68	25	23.5	132	98	13.5	5.5	M25x1.5
416QRS...W	80.5	83	68	25	23.5	133	104	13.5	5.5	M25x1.5
232QRS...W	80.5	83	68	25	23.5	140	108	13.5	5.5	M25x1.5
332QRS...W	80.5	83	68	25	23.5	140	108	13.5	5.5	M25x1.5
432QRS...W	80.5	83	68	25	23.5	143	108	13.5	5.5	M25x1.5

Sockets outlet

for panel mounting with unified straight flange, IP67

432QR6W

16 A. Watertight
Housing in plastic (PA). Cable area 1.5...4 mm²

Terminals/ Poles	Color code	Voltage	Frequency	Type	Order Code	Pkg qty	Weight pkg (1pce)
		V	Hz				kg
2P+E							
3	Yellow	100...130	50 and 60	216QR4W	2CMA102591R1000	10	0.13
	Blue	200...250		216QR6W	2CMA102298R1000		
	Red	380...415		216QR9W	2CMA102870R1000		
3P+E							
4	Yellow	100...130	50 and 60	316QR4W	2CMA102610R1000	10	0.14
	Red	380...415		316QR6W	2CMA102317R1000		
	Blue	200...250		316QR9W	2CMA102889R1000		
3P+N+E							
5	Yellow	100...130	50 and 60	416QR4W	2CMA102631R1000	10	0.15
	Red	346...415		416QR6W	2CMA102338R1000		
	Blue	208...250		416QR9W	2CMA102910R1000		

32 A. Watertight
Housing in plastic (PA). Cable area 2.5...10 mm²

Terminals/ Poles	Color code	Voltage	Frequency	Type	Order Code	Pkg qty	Weight pkg (1pce)
		V	Hz				kg
2P+E							
3	Yellow	100...130	50 and 60	232QR4W	2CMA102650R1000	10	0.18
	Blue	200...250		232QR6W	2CMA102357R1000		
	Red	380...415		232QR9W	2CMA102929R1000		
3P+E							
4	Yellow	100...130	50 and 60	332QR4W	2CMA102702R1000	10	0.25
	Red	380...415		332QR6W	2CMA102376R1000		
	Blue	200...250		332QR9W	2CMA102948R1000		
3P+N+E							
5	Yellow	100...130	50 and 60	432QR4W	2CMA102722R1000	10	0.28
	Red	346...415		432QR6W	2CMA102396R1000		
	Blue	208...250		432QR9W	2CMA102968R1000		

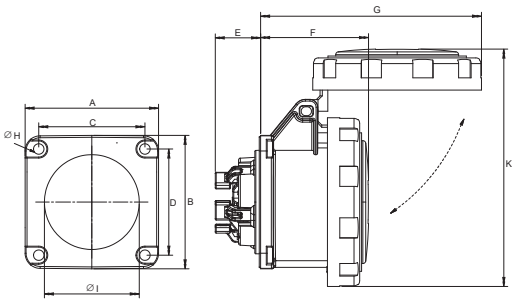

Dimensions (mm)

Type	A	B	C	D	E	F	G	ØH	ØI	K
216QR...	75	75	60	60	24	57	102	5.5	44	108
316QR...	75	75	60	60	24	58	109	5.5	49	114
416QR...	75	75	60	60	24	58	117	5.5	56	126
232QR...	75	75	60	60	30	67	128	5.5	56	132
332QR...	75	75	60	60	30	67	128	5.5	56	132
432QR...	75	75	60	60	30	67	133	5.5	60	140

Socket outlet

for panel mounting with unified angled flange, IP67

FAST & SAFE

216QRA6W

16 A. Watertight
Housing in plastic (PA). Cable area 1.5...4 mm²

Terminals/ Poles	Color code	Voltage V	Frequency Hz	Type	Order Code	Pkg qty	Weight pkg (1pce) kg
2P+E							
3	Yellow	100...130	50 and 60	216QRA4W	2CMA102592R1000	10	0.17
	Blue	200...250		216QRA6W	2CMA102299R1000		
	Red	380...415		216QRA9W	2CMA102871R1000		
3P+E							
4	Yellow	100...130	50 and 60	316QRA4W	2CMA102611R1000	10	0.19
	Red	380...415		316QRA6W	2CMA102318R1000		
	Blue	200...250		316QRA9W	2CMA102890R1000		
3P+N+E							
5	Yellow	100...130	50 and 60	416QRA4W	2CMA102632R1000	10	0.23
	Red	346...415		416QRA6W	2CMA102339R1000		
	Blue	208...250		416QRA9W	2CMA102911R1000		

32 A. Watertight
Housing in plastic (PA). Cable area 2.5...10 mm²

Terminals/ Poles	Color code	Voltage V	Frequency Hz	Type	Order Code	Pkg qty	Weight pkg (1pce) kg
2P+E							
3	Yellow	100...130	50 and 60	232QRA4W	2CMA102651R1000	10	0.24
	Blue	200...250		232QRA6W	2CMA102358R1000		
	Red	380...415		232QRA9W	2CMA102930R1000		
3P+E							
4	Yellow	100...130	50 and 60	332QRA4W	2CMA102703R1000	10	0.26
	Red	380...415		332QRA6W	2CMA102377R1000		
	Blue	200...250		332QRA9W	2CMA102949R1000		
3P+N+E							
5	Yellow	100...130	50 and 60	432QRA4W	2CMA102723R1000	10	0.29
	Red	346...415		432QRA6W	2CMA102397R1000		
	Blue	208...250		432QRA9W	2CMA102969R1000		

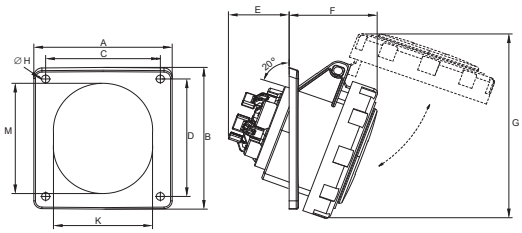

Dimensions (mm)

Type	A	B	C	D	E	F	G	ØH	K	M
216QRA...W	83	90	70	76	37	50	106	5	52	65
316QRA...W	83	90	70	76	37	52	109	5	56	68
416QRA...W	83	90	70	76	37	55	119	5	62	72
232QRA...W	83	90	70	76	43	62	125	5	66	76
332QRA...W	83	90	70	76	43	62	125	5	66	76
432QRA...W	83	90	70	76	49	59	133	5	72	82

Sockets outlet

for panel mounting with minimized straight flange, IP67

416QRM6W

16 A. Watertight
Housing in plastic (PA). Cable area 1.5...4 mm²

Terminals/ Poles	Color code	Voltage	Frequency	Type	Order Code	Pkg qty	Weight pkg (1pce)
		V	Hz				kg
3P+N+E							
5	Yellow	100...130	50 and 60	416QRM4W	2CMA102630R1000	10	0.17
	Red	346...415		416QRM6W	2CMA102337R1000		
	Blue	208...250		416QRM9W	2CMA102909R1000		

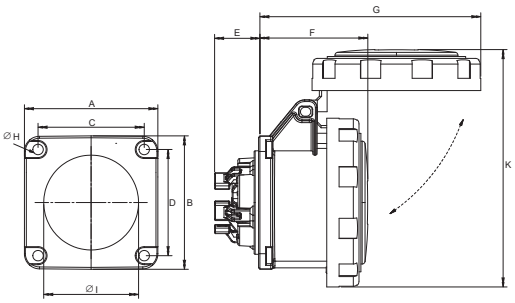

Dimensions (mm)

Type	A	B	C	D	E	F	G	ØH	ØI	K
416QRM...W	70	70	56	56	19	57	117	5.5	56	125

Additional products and accessories

Phase inverter, IP44

416BPI6

Phase Inverter Plug. 16A, IP44. Splashproof
Housing in plastic (PA). Cable area 1...2.5 mm²

Terminals/ Poles	Color code	Voltage	Frequency	Type	Order Code	Pkg qty	Weight pkg (1pce)
		V	Hz				kg
3P+N+E							
5	Red	346...415	**50 and 60**	416BPI6	2CMA102261R1000	**10**	**0.16**

Phase Inverter Plug. 32A, IP44. Splashproof
Housing in plastic (PA). Cable area 2.5...6 mm²

Terminals/ Poles	Color code	Voltage	Frequency	Type	Order Code	Pkg qty	Weight pkg (1pce)
		V	Hz				kg
3P+N+E							
5	Red	346...415	**50 and 60**	432BPI6	2CMA102268R1000	**10**	**0.23**

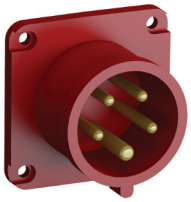

416BBI6

Phase Inverter Panel mounted inlet with unified straight flange. 16A, IP44. Splashproof
Housing in plastic (PA). Cable area 1...2.5 mm²

Terminals/ Poles	Color code	Voltage	Frequency	Type	Order Code	Pkg qty	Weight pkg (1pce)
		V	Hz				kg
3P+N+E							
5	Red	346...415	50 and 60	416BBI6	2CMA102262R1000	**10**	**0.12**

Phase Inverter Panel mounted inlet with unified straight flange. 32A, IP44. Splashproof
Housing in plastic (PA). Cable area 2.5...6 mm²

Terminals/ Poles	Color code	Voltage	Frequency	Type	Order Code	Pkg qty	Weight pkg (1pce)
		V	Hz				kg
3P+N+E							
5	Red	346...415	50 and 60	432BBI6	2CMA102269R1000	**10**	**0.16**

Additional products and accessories

Phase inverter, IP44

432BBSI6

Phase Inverter surface inlets for wall mounting. 16A, IP44. Splashproof

Housing in plastic (PA). Cable area 2.5...6 mm²

Terminals/ Poles	Color code	Voltage	Frequency	Type	Order Code	Pkg qty	Weight pkg (1pce)
		V	Hz				kg
3P+N+E							
5	Red	346...415	50 and 60	416BBSI6	2CMA102263R1000	**5**	**0.13**
				416BBSI6C	2CMA102264R1000		

Phase Inverter surface inlet for wall mounting. 32A, IP44. Splashproof

Housing in plastic (PA). Cable area 2.5...6 mm²

Terminals/ Poles	Color code	Voltage	Frequency	Type	Order Code	Pkg qty	Weight pkg (1pce)
		V	Hz				kg
3P+N+E							
5	Red	346...415	50 and 60	432BBSI6	2CMA102270R1000	**5**	**0.13**
				432BBSI6C	2CMA102271R1000		0.14

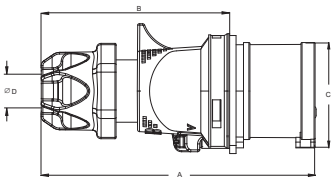

Dimensions (mm)

Type	A	B	C	Ø D
416BPI...	136	96	61	6-16
432BPI...	156	107	70	11-20.5

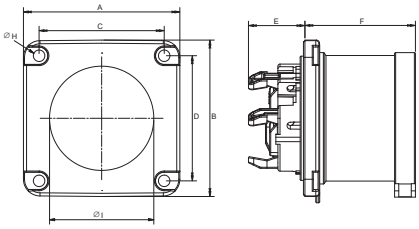

Dimensions (mm)

Type	A	B	C	D	E	F	ØH	ØI
416BBI...	75	75	60	60	23	44	5.5	56
432BBI...	75	75	60	60	27	53	5.5	60

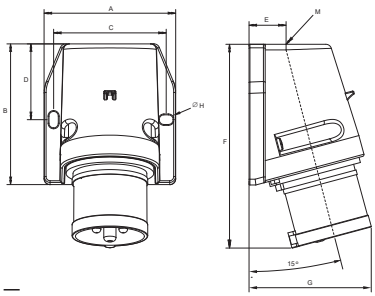

Type ...BBSI...

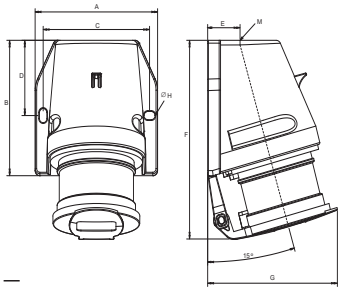

Type ...BBSI...C

Dimensions (mm)

Type	A	B	C	D	E	F	G	ØH	M
416BBSI...	88	88	76	48.5	22	123	84	5.3	M25x1,5
416BBSI...C	88	88	76	48.5	22	123.3	84.3	5.3	M25x1,5
432BBSI...	96	102	84	56	26	146	94	5.3	M32x1.5
432BBSI...C	96	102	84	56	26	146.3	94.3	5.3	M32x1.5

Additional products and accessories

Phase inverter, IP67

416BP6IW

Phase Inverter Plug. 16A, IP67. Watertight
Housing in plastic (PA). Cable area 1...2.5 mm²

Terminals/ Poles	Color code	Voltage	Frequency	Type	Order Code	Pkg qty	Weight pkg (1pce)
		V	Hz				kg
3P+N+E							
5	Red	346...415	**50 and 60**	416BPI6W	2CMA102265R1000	**10**	**0.19**

Phase Inverter Plug. 32A, IP67. Watertight
Housing in plastic (PA). Cable area 2.5...6 mm²

Terminals/ Poles	Color code	Voltage	Frequency	Type	Order Code	Pkg qty	Weight pkg (1pce)
		V	Hz				kg
3P+N+E							
5	Red	346...415	**50 and 60**	432BPI6W	2CMA102272R1000	**5**	**0.25**

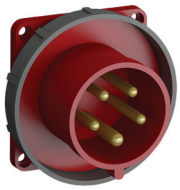

416BBI6W

Phase Inverter Panel mounted inlet with unified straight flange. 16A, IP67. Watertight
Housing in plastic (PA). Cable area 1...2.5 mm²

Terminals/ Poles	Color code	Voltage	Frequency	Type	Order Code	Pkg qty	Weight pkg (1pce)
		V	Hz				kg
3P+N+E							
5	Red	346...415	50 and 60	416BBI6W	2CMA102266R1000	**10**	**0.15**

Phase Inverter Panel mounted inlet with straight flange. 32A, IP67. Watertight
Housing in plastic (PA). Cable area 2.5...6 mm²

Terminals/ Poles	Color code	Voltage	Frequency	Type	Order Code	Pkg qty	Weight pkg (1pce)
		V	Hz				kg
3P+N+E							
5	Red	346...415	50 and 60	432BBI6W	2CMA102273R1000	**10**	**0.22**

Additional products and accessories

Phase inverter, IP67

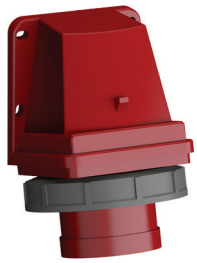

432BBS6IW

Phase Inverter surface inlet for wall mounting. 16A, IP67. Watertight

Housing in plastic (PA). Cable area 1...2.5 mm²

Terminals/ Poles	Color code	Voltage	Frequency	Type	Order Code	Pkg qty	Weight pkg (1pce)
		V	Hz				kg
3P+N+E							
5	Red	346...415	50 and 60	416BBSI6W	2CMA102267R1000	**5**	**0.13**

Phase Inverter surface inlet for wall mounting. 32A, IP67. Watertight

Housing in plastic (PA). Cable area 2.5...6 mm²

Terminals/ Poles	Color code	Voltage	Frequency	Type	Order Code	Pkg qty	Weight pkg (1pce)
		V	Hz				kg
3P+N+E							
5	Red	346...415	50 and 60	432BBSI6W	2CMA102274R1000	**5**	**0.16**

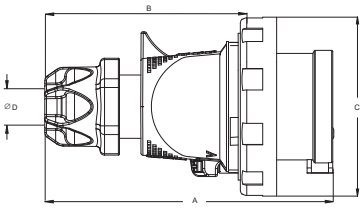

Dimensions (mm)

Type	A	B	C	Ø D
416BPI...W	136	96	89	6-16
432BPI. .W	156	107	102	11-20.5

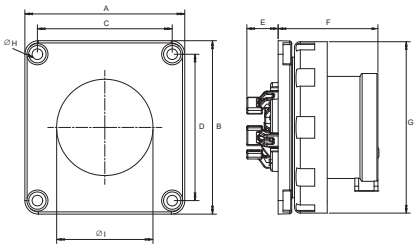

Dimensions (mm)

Type	A	B	C	D	E	F	G	ØH	ØI
416BBI...W	83	90	70	76	17	52	90	5.5	65
432BBI...W	83	90	70	76	21	61	102	5.5	65

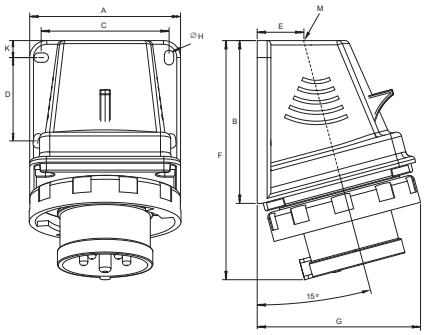

Dimensions (mm)

Type	A	B	C	D	E	F	G	K	ØH	M
416BBSI...W	88.5	95.5	75	49	23.5	140	96	10	5.5	M25x1.5
432BBSI...W	88.5	95.5	75	49	23.5	151	103	10	5.5	M25x1.5

Modular Combi parts

Socket outlet with angled flange, IP67

EASY & SAFE

216ERAU6W

16 A. Watertight
Housing in plastic (PA). Cable area 1...2.5 mm²

Terminals/ Poles	Color code	Voltage V	Frequency Hz	Type	Order Code	Pkg qty	Weight pkg (1pce) kg
2P+E							
3	Blue	200...250	**50 and 60**	216ERAU6W	2CMA104398R1000	**10**	**0.15**
3P+E							
4	Red	380...415	**50 and 60**	316ERAU6W	2CMA104399R1000	**10**	**0.18**
3P+N+E							
5	Red	346...415	**50 and 60**	416ERAU6W	2CMA104400R1000	**10**	**0.21**

416ERAU6W

32 A. Watertight
Housing in plastic (PA). Cable area 2.5...6 mm²

Terminals/ Poles	Color code	Voltage V	Frequency Hz	Type	Order Code	Pkg qty	Weight pkg (1pce) kg
2P+E							
3	Blue	200...250	**50 and 60**	232ERAU6W	2CMA104401R1000	**10**	**0.22**
3P+E							
4	Red	380...415	**50 and 60**	332ERAU6W	2CMA104402R1000	**10**	**0.23**
3P+N+E							
5	Red	346...415	**50 and 60**	432ERAU6W	2CMA104403R1000	**10**	**0.23**

Additional products and accessories

Surface socket outlet with schuko

CUE416-6+R/UJP

16A, IP44. Splashproof
Housing in plastic (PA). Socket outlet with 2 pole schuko. Cable area 1.5...4 mm²

Terminals/ Poles	Color code	Voltage	Frequency	Type	Order Code	Pkg qty	Weight pkg (1pce)
		V	Hz				kg
3P+N+E							
5	Red	400/230	**50 and 60**	CUE416-6+R/UJP	2CMA178301R1000	**10**	**0.34**

16A, IP44. Splashproof
Housing in plastic (PA). Socket outlet with 2 pole schuko. Cable area 1.5...4 mm²

Terminals/ Poles	Color code	Voltage	Frequency	Type	Order Code	Pkg qty	Weight pkg (1pce)
		V	Hz				kg
3P+N+E							
5	Red	400/230	**50 and 60**	CUE416-6+R/FR16	2CMA101642R1000	**10**	**0.34**

16A, IP44. Splashproof
Housing in plastic (PA). Socket outlet with 2 pole schuko. Cable area 1.5...4 mm²

Terminals/ Poles	Color code	Voltage	Frequency	Type	Order Code	Pkg qty	Weight pkg (1pce)
		V	Hz				kg
3P+N+E							
5	Red	400/230	**50 and 60**	CUE416-6+R/BS13	2CMA101635R1000	**10**	**0.34**

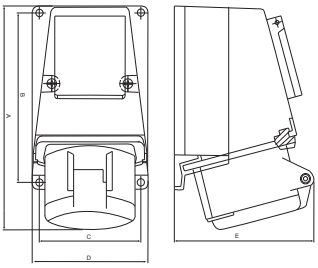

Dimensions (mm)

Type	A	B	C	D	E
CUE416-6+R/UJP	160	120	72	82	110

ABB AB
Electrification Products
Box 1005
SE-611 29 NYKÖPING, Sweden
Phone: +46 155 29 50 00
Fax: +46 155 28 81 10

www.abb.com/industrialplugs

Below QR-code is linked to our web site www.abb.com/industrialplugs. You will have to download a QR-code reader app to your phone in order to use it.

Catalog 2CMC700006C0201. Rev. D, October 2017. Prod ABB AB, Electrification Products

© Copyright 2017 ABB. All rights reserved.
Specifications subject to change without notice.